62949100

CONTROL DATA CORPORATION

CDC® PLATO® FLEXIBLE DISK SUBSYSTEM

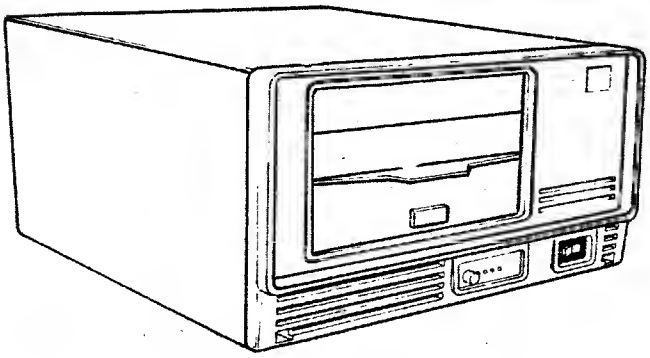

HARDWARE MAINTENANCE MANUAL (SITE AND SUPPORT INFORMATION)

REVISION RECORD	
REVISION	DESCRIPTION
01 (08-13-80)	Preliminary release.
A (10-03-83)	Final release. Includes changes per ECOs 14165, 14190, 14199, 14203, 14246, 14258, 14317, 14323, and 14328.
B-Interim (12-17-83)	Manual revised to incorporate ECO 14376.
C (01-23-81)	Manual revised to incorporate ECO's 14469, 14468, 14454, 14391, 14329, 14321, and 14279. Incorporates ECO 14376 (B-Interim) in its final form & makes technical corrections/changes.
D (03-02-81)	Manual revised to incorporate ECOs 14514 and 14571.
E-Interim (08-13-81)	Manual revised to incorporate ECO's 14539, 14591, 14582, 14613, 14663, and 14721.
F (10-08-81)	Manual revised to incorporate ECOs 14742, 14774, and 14838. Also includes technical changes to include media update and product name change.
G (01-19-82)	Manual revised to incorporate ECOs 14885, 14985, 14965, 14820, 14778. Also includes change in SAM 3, product name change.
H (11-23-82)	Manual revised to incorporate ECOs 15294, 15351, and 15462. FCC certification information also added.
J (05-11-83)	Manual revised to incorporate ECOs 14663 (Rev B), 14999, 15634, 15675, 15771, 15786, 15812 and 15867.

Publication No.

62949100

REVISION LETTERS I, O, Q AND X ARE NOT USED

Address comments concerning this manual to:

Control Data Corporation
Publications and Graphics Div.
2401 North Fairview Avenue
St. Paul, Minnesota 55113

or use Comment Sheet in the back of this manual.

©1980, 1981, 1982, 1983

by Control Data Corporation
Printed in the United States of America

REVISION RECORD (CONTD)	
REVISION	DESCRIPTION
K (08-16-83)	Manual revised to incorporate ECOs 15917, 15945, 16005 and 16060.

Publication No.

62949100

This manual reflects the equipment configurations listed below.

EXPLANATION: Locate the equipment type and series number, as shown on the equipment FCO log, in the list below. Immediately to the right of the series number is an FCO number. If that number and all of the numbers underneath it match all of the numbers on the equipment FCO log, then this manual accurately reflects the equipment.

EQUIPMENT TYPE	SERIES	WITH FCO'S	COMMENTS
FA501-A	01	-	ECOs 14328, 14376, 14454
	01	-	ECO 14165 (S/N 141)
	02	-	ECO 14468 (S/N 274)
	03	14571	S/N 401
	04		ECO 14663 (S/N 701)
	05	-	ECO 14985 (S/N 1115)
	06	-	ECO 15771 (S/N 4635)
	07		
FA501-B	01	-	ECOs 14238, 14376, 14454
	01	-	ECO 14165 (S/N 141)
	02	14571	S/N 401
	03		ECO 14663 (S/N 701)
	04	-	ECO 14985 (S/N 1115)
	05	-	ECO 15771 (S/N 4635)
	06		
FA501-C	01	-	ECO 14985, 15043
	01	-	ECO 15771 (S/N 4635)
	02		
FA501-D	01	-	ECO 14985
	01	-	ECO 15771 (S/N 4635)
	02		
BR810-A	01	-	ECOs 14240, 14165, 14328, 14403
	01	-	ECO 14468 (S/N 274)
	02		ECO 14985 (S/N 391)
	03		
BR810-B	01	-	ECOs 14240, 14165, 14328
	01		ECO 14985 (S/N 391)
	02		

MANUAL TO EQUIPMENT LEVEL CORRELATION SHEET (CONTD)

EQUIPMENT TYPE	SERIES	WITH FCO'S	COMMENTS
XA243-A	01		
FT116-A	01		

New features, as well as changes, deletions, and additions to information in this manual are indicated by bars in the margins or by a dot near the page number if the entire page is affected. A bar by the page number indicates pagination rather than content has changed.

PAGE	REV	PAGE	REV	PAGE	REV
Cover	-	6A-5	F	Back Cover	-
WARNING		6A-6 thru 6A-8	G		
Title Page	-				
iia thru iic	K	PROCEDURES			
iii/iv	J	Section 6B			
v/vi	K	6B-1	C		
vii thru xi	G	6B-2	F		
xii	J	6B-3/6B-4	A		
xiii	G	6B-5 thru 6B-9	G		
PLATO HOTLINE	-	6B-10	A		
1-1 thru 1-4	G				
1-5	F	PARTS DATA FOR			
2-1 thru 2-3	G	PREPRODUCTION			
2-4	F	UNITS ONLY			
3-1 thru 3-4	G	7-1/7-2	A		
3-5	K	7-3/7-4	J		
3-6 thru 3-8	G	7-5/7-6	G		
3-9	F	7-7	J		
4-1/4-2	F	7-8	A		
4-3	C	7-9	J		
4-4	A	7-10	A		
4-5	F	7-11 thru 7-16	C		
4-6/4-7	G	7-17 thru 7-20	E		
4-8	A				
4-9	F	PARTS DATA FOR			
4-10/4-11	A	PRODUCTION UNITS			
4-12	F	ONLY			
4-13	C	7-21 thru 7-30	J		
4-14	F	7-31/7-32	G		
4-15	G	7-33 thru 7-38.10	J		
5-1	A	7-39 thru 7-42	J		
5-2 thru 5-16.2	J				
5-17	J	COMMON PARTS DATA			
5-18 thru 5-22	A	APPLICABLE TO BOTH			
5-23 thru 5-25	K	PREPRODUCTION AND			
6-1 thru 6-3	A	PRODUCTION UNITS			
6-4/6-5	F	7-43 thru 7-47	D		
6-6	A	7-48 thru 7-48.12	J		
6-7	F	7-49/7-50	F		
		7-51/7-52	G		
SAMS Section 6A		7-53 thru 7-55	H		
6A-1	A	7-56 thru 7-61	K		
6A-2	F	8-1	A		
6A-3	C	Comment Sheet	K		
6A-4	A	Mailer	-		

PREFACE

This manual provides information to aid in the installation, checkout, and maintenance of the CDC® PLATO® Flexible Disk Subsystem. Information is provided for both on-site and technical support use. The subsystem provides flexible disk storage capability to an Information Systems Terminal (IST-II and IST-III).

Product number correlation for the various subsystem configurations and associated memory options is as follows:

Equipment Number	Description
FA501-A	Primary Flexible Disk Subsystem, 60 Hz, 120 V ac.
BR810-A	Secondary Flexible Disk Drive, 60 Hz, 120 V ac.
FA501-B	Primary Flexible Disk Subsystem, 50 Hz, 220/240 V ac.
BR810-B	Secondary Flexible Disk Drive, 50 Hz, 220/240 V ac.
FA501-C	Control Data 110 Primary FD Subsystem, 60 Hz, 120 V ac.
FA501-D	Control Data 110 Primary FD Subsystem, 50 Hz, 220/240 V ac.
XA243-A	Additional 16K by 8-bit RAM Option (up to three RAM options may be added to the FA501-A/B). The FA501-C/D has 64K RAM standard.
FT116-A	Terminator assembly for IST parallel I/O channel.

Organization of this manual is divided into eight major sections:

Section 1 - General Description
Section 2 - Operation
Section 3 - Installation and Checkout
Section 4 - Theory of Operation
Section 5 - Diagrams
Section 6 - Maintenance
Section 7 - Parts Data
Section 8 - Wire Lists

Other manuals providing reference and operator information on the flexible disk subsystem, maintenance information on the flexible disk drive assembly, and maintenance information on the IST terminal are listed as follows. All manuals may be ordered from:

Control Data Corporation
Literature and Distribution Services
308 North Dale Street
St. Paul, Minnesota 55103

Title	Publication Number
PLATO® Flexible Disk Subsystem Operators Guide	62940005
9406 Flexible Disk Drive Assembly Hardware Maintenance Manual	77614903
Information Systems Terminal II Hardware Maintenance Manual (IST-II)	82100083
Information Systems Terminal III Hardware Maintenance Manual (IST-III)	62940007
Engineering Services Diagnostic Disk for PLATO® Flexible Disk Subsystem Operators Manual	62940015
Control Data 110 Microcomputer System Installation and Diagnostics Manual	62940024
Control Data 110 Software Users Manual	62940025

In addition to these publications, an instructional flexible disk and user's installation guide are available as follows:

Micro Plato Instructional Flexible Disk	76773000 A
Micro Plato User's Installation Guide	76368339

The disk and the guide may be ordered, using an Education Order Form, from:

Order Administrator
Education Company
8100 34th Avenue South
P.O. Box 0
Minneapolis, Minnesota 55440

Diagnostic disks to support CD110 and Micro Plato are available as follows:

CD110 Users Diagnostic Flexible Disk	66314929
Engineering Services Diagnostic Disk	76774999

Control Data Corporation
Software Development and Distribution (ARH230)
4201 Lexington Avenue North
Arden Hills, Minnesota 55112

Or telephone:

Gerald J. Ferber, ARH230,
Software Distribution
Phone 612-482-3744
Control Net 235-3747

The IST II and the IST III have been approved by the Federal Communications Commission (FCC) as not being harmful to the telephone network when connected directly to the telephone lines. Instructions for fully complying with Part 68, FCC Docket 19528 can be found in the Site and Support manuals that accompany the particular terminal being used.

CONTENTS

1. GENERAL DESCRIPTION

Subsystem Configuration 1-1
Primary Flexible Disk Subsystem 1-2
Control Data 110 Primary Flexible Disk Subsystem . 1-2
Secondary Flexible Disk Drive 1-2
RAM Expansion Feature 1-2
ROM Expansion Feature (Future Availability) . . . 1-2
Media 1-3
Equipment Specifications 1-4

2. OPERATION

Voltage Select Switch 2-1
Power On/Off Switch/Circuit Breaker 2-1
Device Address Strap (Primary Units Only) 2-2
Master Reset Switch (Primary Units Only) 2-2
Diagnostic Control Switches (Primary Units Only) . . 2-2
Switch 2^0 2-3
Switch 2^1 2-3
Switch 2^2 2-3
Switch 2^3 2-3
Switch 2^4 and 2^5 2-3
Switch 2^6 2-4
Switch 2^7 2-4
LED Indicators 2-4

3. INSTALLATION AND CHECKOUT

Packaging 3-1
Installation 3-1.1
Subsystem Installation 3-2
RAM Option Installation 3-6
Checkout 3-7

4. THEORY OF OPERATION

AC Power Entry Panel 4-2
Power Supply 4-2
Backplane 4-3
Flexible Disk Drive (FDD) Assembly 4-4
Controller Board (Primary Units Only) 4-6
Z80A Microprocessor 4-8
9517A-4 Direct-Memory-Access (DMA) Controller . . 4-8
1791A-02 Flexible Disk Controller (FDC) 4-9
2716 Erasable Programmable Read-Only Memory (EPROM) 4-9
Z80 Counter/Timer Circuit (CTC) 4-10
9519 Interrupt Controller 4-11

External Interface Pin Assignments 4-12
Internal Connector Pin Assignments 4-12

5. DIAGRAMS

Schematic Diagram, 9BED 5-2
Schematic Diagram 9BKD (PFDS Power Supply) 5-18
Schematic Diagram (9BMD) (FDD Controller Backplane) . 5-21
50/60 Hz A.C. Power Wiring 5-22
Schematic Diagram (1AFD) (PFDS Power Supply) 5-23

6. MAINTENANCE

General Maintenance Information 6-1
Suggested Emergency Maintenance Procedure 6-1
Before Leaving for Customer Site 6-2
Upon Arriving at Customer Site 6-2
Safety Precautions 6-3
Maintenance Tools and Materials 6-3
MOS Circuit-Handling Precautions 6-3
Maintenance Aids 6-4
Location of Major Assemblies 6-4
Diagnostic and Corrective Maintenance 6-4
Diagnostic Self-Test Routines 6-4
LED Test 6-5
Test 0 - ROM Checksum 6-5
Test 1 - RAM Test 6-6
Test 2 - Interrupt Generator 6-6
Test 3 - Flexible Disk Controller 6-6
Test 4 - DMA Test 6-6
Test 5 - I/O Loopback Test 6-6
Test 6 - CTC Test 6-6
Test 7 - Writing and Reading the Disk 6-7
DIAG Flexible Disk Diagnostic Tests 6-7
Explanation of SAM Format 6-7
Organization of SAMs and Procedures 6-7
Procedure 1 - Power Application/Removal 6B-1
Procedure 2 - Flexible Disk Installation/
Removal 6B-2
Procedure 3 - Front Panel and Cabinet Hood
Removal/Replacement 6B-4
Procedure 4 - Controller Board Removal/
Replacement 6B-5
Procedure 5 - Power Supply Removal/Replacement. 6B-6
Procedure 6 - Disk Drive Unit Removal/
Replacement 6B-8

7. PARTS DATA

(Pre-Production Units Only)

SPL Primary Flexible Disk Subsystem 7-3
SPL Secondary Flexible Disk 7-5
Genealogy Chart Primary Flexible Disk Subsystem 60 Hz 7-7
Genealogy Chart Primary Flexible Disk Drive 60 Hz . . 7-8
Genealogy Chart Primary Flexible Disk Subsystem 50 Hz 7-9
Genealogy Chart Secondary Flexible Disk Drive 50 Hz 7-10
PLATO Flexible Disk (TLA) 7-11
AC Entry Assy, Flex Disk 7-17

(Production Units Only)

SPL FA501A/C (60 Hz Primary) 7-21
SPL FA501B/D (50 Hz Primary) 7-23
SPL BR810A (60 Hz Secondary) 7-25
SPL BR810B (50 Hz Secondary) 7-27
Genealogy Chart (60 Hz Primary) 7-29
Genealogy Chart (50 Hz Primary) 7-30
Genealogy Chart (60 Hz Secondary) 7-31
Genealogy Chart (50 Hz Secondary) 7-32
PLATO Flexible Disk (TLA) 7-33
CD110 Flexible Disk (TLA) 7-38.5
AC Entry Assembly 7-39

(Common Parts Data)

P.C. Card Assembly, 9BED (Disk Controller) 7-43
P.C. Card Assembly, 9BED-3 (Disk Controller) 7-48.4
P.C. Card Assembly, 9BED w/Full Memory 7-48.8
Card Assembly Controller Module w/Full Memory 7-48.10
P.C. Card Assembly, 9BKD 7-48.12
P.C. Card Assembly, 1AFD 7-52
P.C. Card Assembly, 9BMD 7-60

8. WIRE LISTS 8-1

FIGURES

1. GENERAL DESCRIPTION

1-1 PLATO Flexible Disk Subsystem 1-1
1-2 PFDS Primary and Secondary Unit Details 1-3

2. OPERATION

2-1 Control and Indicator Locations 2-1

3. INSTALLATION AND CHECKOUT

3-1 Flexible Disk Subsystem Packaging 3-2.1
3-2 Controller Board Switches and Indicators . . . 3-4
3-3 I/O Cable and Terminator Installation 3-5
3-5 Power Supply Voltage Indicators 3-7

4. THEORY OF OPERATION

4-1 Major Elements of Subsystem 4-1
4-2 Subsystem Block Diagram 4-2
4-3 Drive Assembly Functional Block Diagram 4-5
4-4 Controller Board Block Diagram 4-7
4-5 External Wiring of the CTC for Head-Load Timing 4-10
4-6 External Wiring of the CTC for Real-Time Clock 4-11
4-7 Flexible Disk Interrupt Network 4-12
4-8 Internal Connector Pin Assignments 4-15

6. MAINTENANCE

6-1 Location of Assemblies in Subsystem 6-5
6-2 SAM Example 6-8
6B-1 Power On/Off Switch Location 6B-1
6B-2 Disk Installation/Removal 6B-2
6B-3 Front Panel and Cabinet Hood Mounting Details . 6B-4
6B-4 Controller Board Layout 6B-5
6B-5 Power Supply Voltage Adjustments 6B-7
6B-6 Disk Drive Unit Installation 6B-9
6B-7 Drive Pulley Details 6B-10

TABLES

1. GENERAL DESCRIPTION

1-1 Equipment Specifications 1-4

4. THEORY OF OPERATION

4-1 Parallel I/O Channel Pin Assignments 4-13
4-2 Secondary Drive Unit Channel Pin Assignments . 4-14

7. PARTS DATA

7-1 Explanation of Column Headings on Assembly Parts Lists 7-1

Should difficulties be encountered in installing, testing, or running this equipment, you may obtain assistance by contacting your CDC sales representative for the telephone number applicable to your installation. After obtaining the number, write it here for future reference:

TELEPHONE NUMBER_____

This section provides a general description of the PLATO Flexible Disk Subsystem (PFDS) configuration including the related equipment specifications. The PFDS is a Z80 microprocessor-based programmable storage subsystem that is intended for use by an Information Systems Terminal. The subsystem interfaces with the terminal via the PLATO parallel I/O channel. Refer to figure 1-1 for an exterior view of the subsystem.

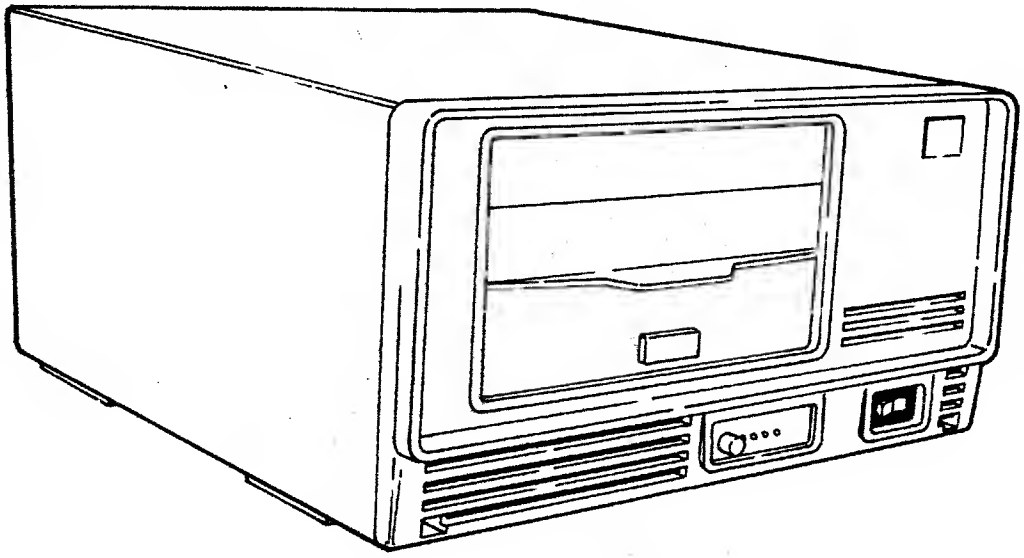

03892

Figure 1-1. PLATO Flexible Disk Subsystem

SUBSYSTEM CONFIGURATION

The PFDS is configured as two basic versions:

- Primary Flexible Disk Subsystem
- Secondary Flexible Disk Drive

Each version is available as either a 60-Hz or 50-Hz product/equipment. Refer to the preface for product/equipment number correlation.

The subsystem can consist of a single primary unit or a primary unit and one secondary unit. The two units (primary and secondary) are interfaced by attaching the signal lines of both 9406 Disk Drives together via a 50-pin interconnecting I/O cable. The net effect is that the controller logic board of the primary unit is interfaced to both 9406 Disk Drives connected in parallel as shown in figure 1-2.

PRIMARY FLEXIBLE DISK SUBSYSTEM

The Primary Flexible Disk Subsystem contains a CDC 9406 Flexible Disk Drive, a 50-Hz or 60-Hz ac power entry panel, a mother-board backplane, a dc power supply, and a Z80-based controller logic board.

CONTROL DATA 110 PRIMARY FLEXIBLE DISK SUBSYSTEM

The Control Data 110 Primary Flexible Disk Subsystem contains a CDC 9406 Flexible Disk Drive, a 50-Hz or 60-Hz ac power entry panel, a mother-board backplane, a dc power supply, and a Z80-based controller logic board with 64K of RAM.

SECONDARY FLEXIBLE DISK DRIVE

The Secondary Flexible Disk Drive is identical to a primary unit except that the Z80-based controller logic board is removed.

RAM EXPANSION FEATURE

The standard subsystem random-access memory consists of 16K 8-bit words in the FA501-A/B. The RAM size may be expanded to a total of 64K 8-bit words in 16K-word increments. Each 16K RAM option consists of eight 16-pin integrated circuits (ICs). IC sockets are provided on the controller logic board for installation of the RAM chips. The FA501-C/D has 64K as standard.

MEDIA

The recommended media for use in the subsystem is a good commercial flexible disk (double-sided, double-density). These flexible disks have the following characteristics:

- Index - 1
- Sectors - Programmable
- Cylinders - 77
- Tracks per cylinder - 1 for single-sided disk, 2 for double-sided disk.
- Surfaces - 2
- Tracks per inch 48
- Bits per inch - 6816 double density

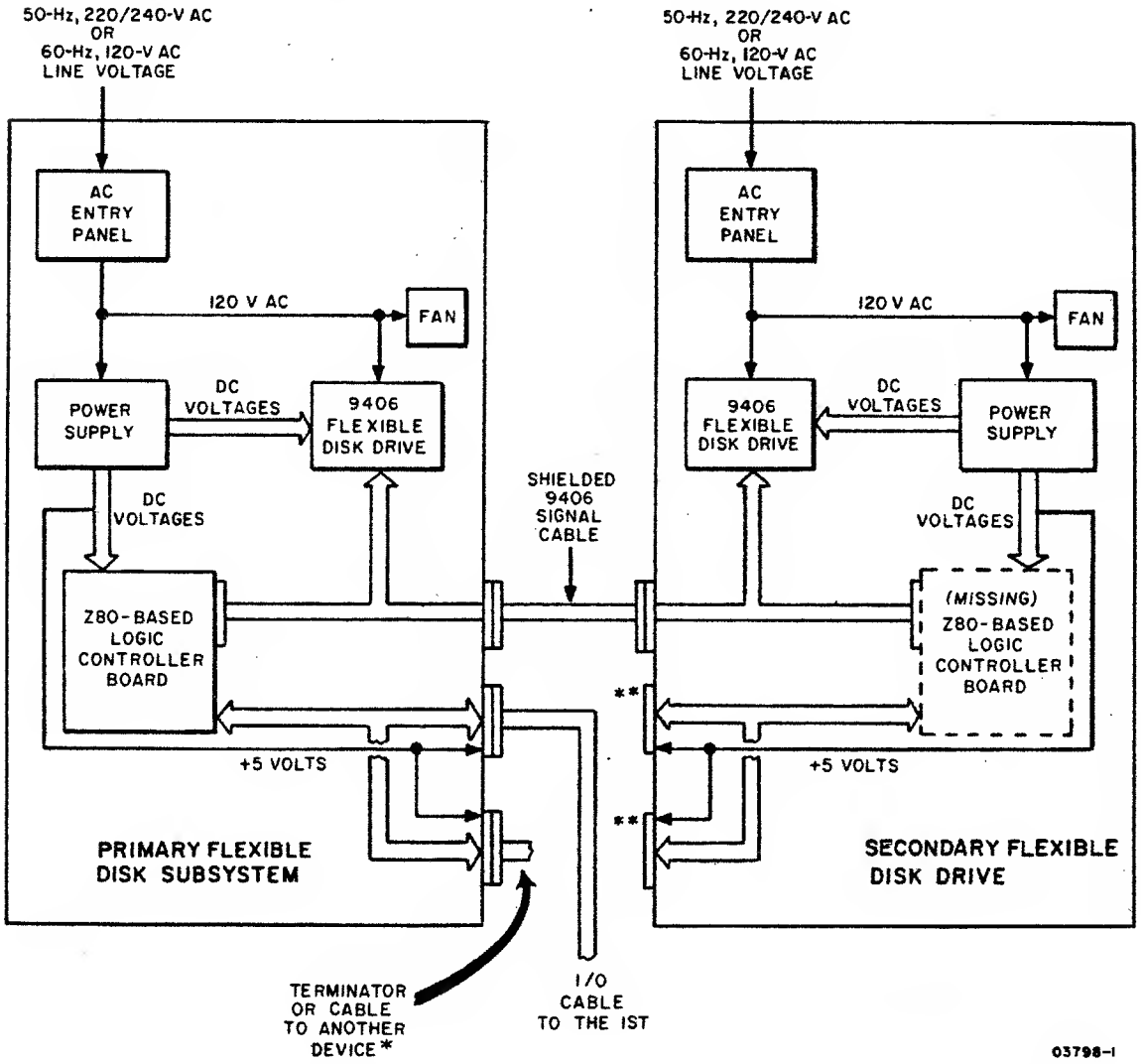

*The other device could be another Primary Flexible Disk Subsystem, Graphic Printer, etc.
**These connectors are not used.

Figure 1-2. PFDS Primary and Secondary Unit Details

EQUIPMENT SPECIFICATIONS

Equipment specifications for the subsystem are listed in table 1-1.

TABLE 1-1. EQUIPMENT SPECIFICATIONS

CHARACTERISTIC	SPECIFICATION
Dimensions:	
Height	202.85 mm (7.99 in)
Width	381 mm (14.99 in)
Depth	502.5 mm (19.78 in)
Weight:	
FA501-A/C (60-Hz primary)	16.78 kg (37 lb) maximum
FA501-B/D (60-Hz primary)	20.19 kg (44.51 lb) maximum
BR810-A (60-Hz secondary)	16.33 kg (36 lb) maximum
BR810-B (50-Hz secondary)	19.73 kg (43.5 lb) maximum
Power Requirements: (Nominal)	
FA501-A/C	120 V ac, 60 Hz, 1.4 A, 0.18 kW maximum
FA501-B/D	220/240 V ac, 50 Hz, 0.8 A, 0.19 kW maximum
BR810-A	120 V ac, 60 Hz, 1.2 A, 0.16 kW maximum
BR810-B	220/240 V ac, 50 Hz, 0.68 A, 0.16 kW maximum
Temperature:	
Operating	10°C to 32°C (50°F to 90°F)
Nonoperating	-34°C to 66°C (-30°F to 150°F)
Change/h	6.7°C (12°F)
Relative Humidity:	
Operating	10% to 80%
Nonoperating	5% to 95%
Change/h	10%
Operating Altitude:	3000 m (9850 ft) maximum
Heat Dissipation (Air):	555 Btu/h (161.3 W) maximum, fan cooled

TABLE 1-1. EQUIPMENT SPECIFICATIONS (CONTD)

CHARACTERISTIC	SPECIFICATION
Disk Storage Capacity:*	Double Density
Bytes/Track	10 416
Bytes/Cylinder**	20 832
Bytes/Surface	802 032
Bytes/Disk**	1 604 064
Bits/Byte	8
Transfer Rate:*	Double Density
	500 k b/s
	62.5 bytes/s
Seek Time:	3 ms
Head Stabilization Time:	20 ms
Head Load Time:	40 ms
Disk Rotation:	360 r/min ±3.5%
Latency:	
Maximum	166.7 ms
Average	83.3 ms
Recording Method:	Modified Frequency Modulation (MFM)

*Storage capacity and data transfer rates are a function of the formatting used on the disk and the programming of the controller.

**Applies to double-sided disk only.

This section describes the controls and indicators of the flexible disk subsystem. Locations are shown in figure 2-1. Refer to the Micro Plato user's installation guide and Micro Plato instructional flexible disk or the Control Data 110 Microcomputer System User Installation and Diagnostics Manual for information on associated operating programs (see preface for publication/part numbers).

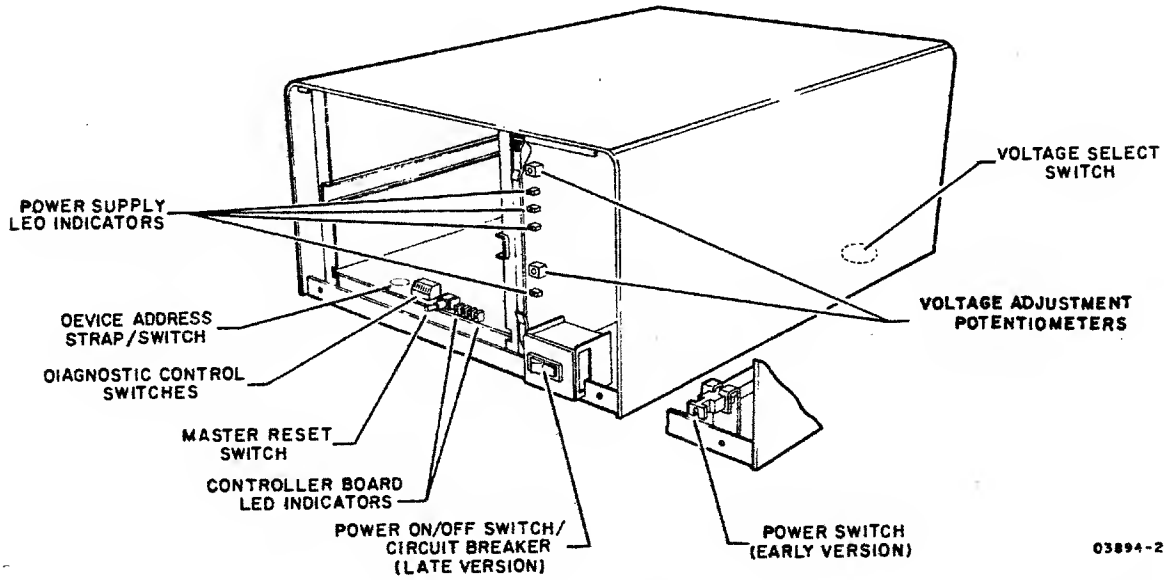

Figure 2-1. Control and Indicator Locations

VOLTAGE SELECT SWITCH

The voltage select switch is present on 220/240-V, 50-Hz units only. The switch is located on the bottom of the cabinet and selects taps on the transformer primary winding to match the input site voltage available. A metal plug covers the access hole.

POWER ON/OFF SWITCH/CIRCUIT BREAKER

Two versions of the Power On/Off switch/circuit breaker exist. Early units have the switch/circuit breaker mounted toward the

rear of the unit with a connecting rod attached to a push/pull control knob at the front of the unit. Power is applied by pulling the knob forward and power is removed by pressing the knob in. Later units have a rocker switch/circuit breaker mounted on the front of the unit.

A power application initializes all internal control logic circuits, and if bit 2^7 of the diagnostic control switches is down, initiates the self-test diagnostics.

The circuit breaker provides necessary overload protection for the subsystem.

DEVICE ADDRESS STRAP (PRIMARY UNITS ONLY)

The subsystem device address is wired to position 7 by the device address strap at the front of the controller board. In early units the subsystem device address is established by a 10-position binary-coded-decimal rotary switch at the front of the controller board.

MASTER RESET SWITCH (PRIMARY UNITS ONLY)

Pressing the Master Reset switch reinitializes the operating program. Holding the switch pressed more than three seconds, reinitiates the self-test diagnostics (if selected), and reloads the operating program into RAM memory. The operating program is loaded from the flexible disk if available. If a flexible disk is not present, the flexible disk subsystem trys to load from the PLATO system.

DIAGNOSTIC CONTROL SWITCHES (PRIMARY UNITS ONLY)

There are eight switches on the front of the controller board that provide manual control of the program and self-test diagnostics. Diagnostic test descriptions are provided in section 6. Control functions selected by these switches are as follows:

SWITCH 2^0 - Not used

SWITCH 2^1

- Up - Allows result of detailed memory test to be displayed in LEDs per switch 2^2 setting.
- Down - Bypasses displaying result of detailed memory test selected by switch 2^2.

SWITCH 2^2

- Up - Allows failing memory IC within a RAM bank to be displayed in LEDs. Switch 2^1 must be in up position to view this display. Also note that for subsystems having more than 16K of RAM, failing memory bank must first be determined by having switch 2^2 down.
- Down - Allows failing memory bank to be displayed in LEDs. Switch 2^1 must be in up position to view this display.

SWITCH 2^3

- Up - Bypasses test 7 (write/read on disk) of diagnostics.
- Down - Enables execution of diagnostic test 7.

SWITCH 2^4 and 2^5

These switches define what banks of RAM are installed:

Switch 2^5	Switch 2^4	RAM BANKS AVAILABLE	ADDRESS RANGE (HEX)
Down	Down	1 (16K)	4000 - 7FFF
Down	Up	1, 2 (32K)	4000 - BFFF
Up	Down	1, 2, 3 (48K)	4000 - FFFF
Up	Up	0, 1, 2, 3 (64K)	0000 - FFFF

All FA501-C/D units have 64K RAM; both switches 2^4 and 2^5 must be up.

SWITCH 26

- Up - Allows looping on diagnostic tests.
- Down - Does not loop on diagnostics.

SWITCH 27

- Up - Bypasses diagnostic test execution.
- Down - Enables execution of the diagnostics except when switch 2^0 is up.

LED INDICATORS

Primary units have four red LED indicators on the controller board that are visable through holes in the front panel. The LEDs are used by the self-test diagnostics to indicate detected errors. LED 2^3 (leftmost) indicates a diagnostic error and LEDs 2^0 through 2^2 identify the failing memory bank or IC as determined by the settings of switch 2^0, 2^1, 2^2, and 2^7 of the diagnostic control switches.* At successful completion of the diagnostics, LED 2^0 is assigned as the power-on indicator. These LEDs are also user programmable.**

Both primary and secondary units have four red voltage LEDs on the power supply PC board. The front panel must be removed to view the indicators. These LEDs indicate presence of +24 V, +12 V, +5 V, and -5 V at the power supply outputs. Note that a lit LED does not conclusively indicate that the correct voltage is present, only that there is sufficient voltage to bias the device on.

Two adjustment potentiometers are also on the power supply PC board. These provide for adjusting the +24-V and +5-V power supply outputs.

---

*LEDs 2^0 through 2^2 define which test section has failed. If diagnostic control switch 2^1 is up and there is a memory error, then LEDs 2^0 through 2^2 identify the failing memory bank or IC depending on setting of switch 2^2.

**After completion of the self-test diagnostics, the operating system uses LED 2^3 as an Error indicator, LED 2^2 as a Read indicator, LED 2^1 as a Write indicator, and LED 2^0 as a Power-on indicator.

This section provides information on packaging, installation, and checkout of the flexible disk subsystem.

CAUTION

Control Data 110 Terminal Subsystem users must use installation, check-out, and diagnostics procedures described in Control Data 110 Micro-computer System User Installation and Diagnostics Manual.

CAUTION

Observe MOS circuit handling precau-tions (described in section 6 of this manual) when handling or pack-aging the controller board.

PACKAGING

The flexible disk subsystem is packaged for shipment using foam-in-place chemicals (figure 3-1). If the subsystem is to be reshipped it must be packaged as it was originally received from the factory. Use the existing packing materials or if not available, order new packing materials from CDC Corporate Traffic. Request pre-formed packing materials for the FA501/BR810 per packing instructions 41039800. Packaging materials may be obtained from:

Control Data Corporation
Corporate Traffic
8100 34th Avenue South
Minneapolis, Minnesota 55440

When returning other assemblies for repair, use the packaging material that the spared assembly was shipped in.

NOTE

When shipping any disk drive be sure to insert the cardboard head-protect flexible disk into the drive unit.

INSTALLATION

This subsection provides information for installing the flexible disk subsystem (primary and secondary units) and for field installation of the RAM options if applicable to the primary unit.

NOTE

Selective FCO CD14283 must be installed if the disk is to be used on an IST-II with a serial number below 3000. This FCO provides a new ROM with a disk loader. The part number for FCO CD14283 is 66202932.

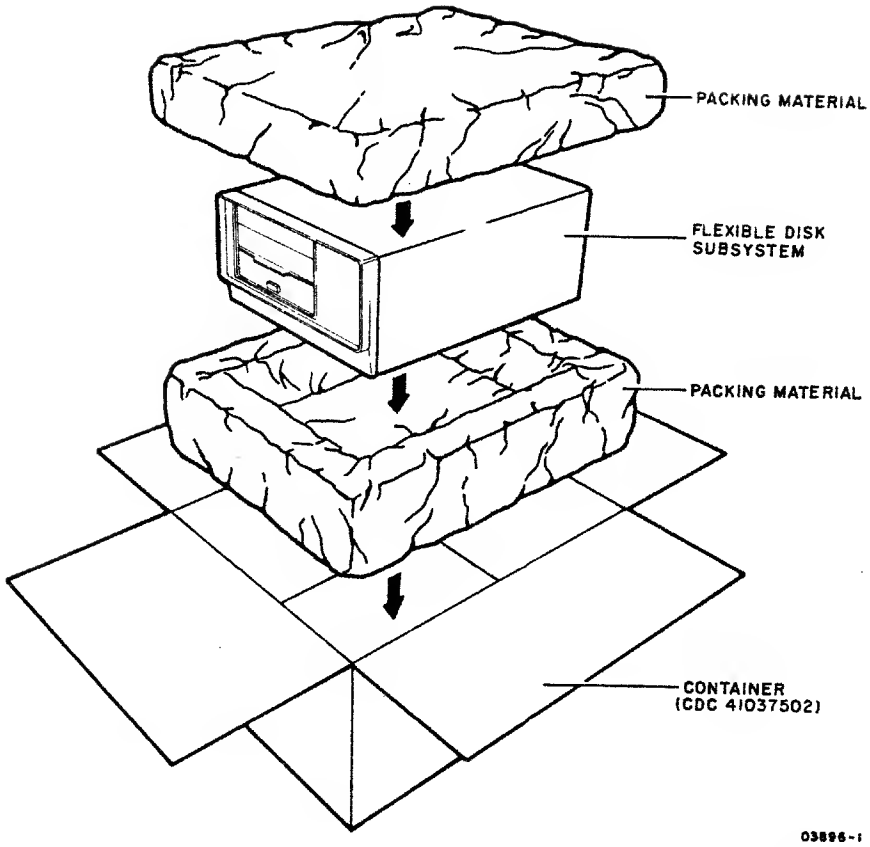

Figure 3-1. Flexible Disk Subsystem Packaging

SUBSYSTEM INSTALLATION

Install the flexible disk subsystem per the following. Procedure numbers used in the steps refer to specific procedures contained in section 6B of this manual.

1. Unpackage subsystem (refer to figure 3-1), and move to desired location. Remove cardboard head-protective flexible disk from drive unit and store with subsystem packaging materials. Note that secondary unit may be stacked on top of primary unit or primary unit may be stacked on top of secondary unit or units may be placed side-by-side if desired.

2. Inspect for any shipping damage.

3. For 50-Hz units, verify that Voltage Select switch (bottom of cabinet, metal plug covers access hole) is set

correctly to match site ac primary input voltage as follows:

Switch Position	Voltage Range
120 V	Not Used
220 V	191 V to 235 V
240 V	208 V to 257 V

NOTE

Cover unused voltage designation on ID plate (figure 3-4) with black tape.

4. This step applies to primary flexible disk units only. Remove front panel of unit (procedure 3) and locate switches at front of controller board (figure 3-2).

   - Check that device address strap is wired to address 7 as in figure 6B-4. (Set device address switch to address 7 if unit has switch.)

   - Set Diagnostic Control Switches as follows:

     Switch 2^0 - Not used

     Switch 2^1 - Down (bypasses displaying result of detailed memory test selected by switch 2^2).

     NOTE

     Switch 2^1 must be down to display the failing test number in the LEDs. If a test 1 (memory test) failure is detected, place switch 2^1 up to display the specific memory bank or IC failure as selected by switch 2^2.

     Switch 2^2 - Down (allows failing memory bank to be displayed in LEDs).

     Switch 2^3 - Up (disables running test 7 of resident diagnostics).

     Switch 2^4 and 2^5 - For FA501-C/D set both switches up. For FA501-A/B set to RAM memory size available as follows (each XA243-A option adds 16K of RAM):

Switch 2^5	Switch 2^4	RAM Size
Down	Down	16K (Standard)
Down	Up	32K (Option)
Up	Down	48K (Option)
Up	Up	64K (Option)

Switch 26 - Down (does not loop on diagnostics).

Switch 27 - Down (enables running diagnostic tests).

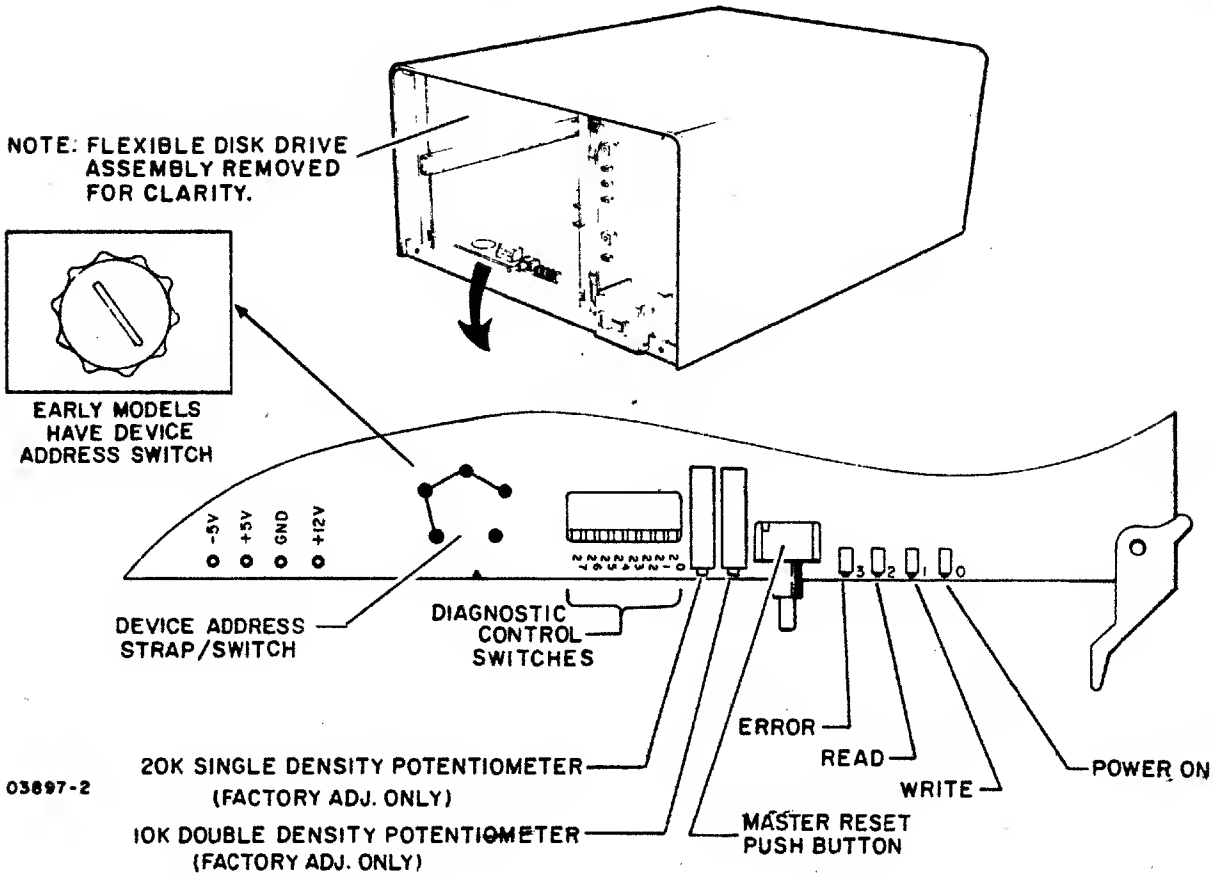

Figure 3-2. Controller Board Switches and Indicators

5. Refer to figure 3-3 and install I/O cable and terminator assembly per the following as applicable:

NOTE

A standard 25-pin RS-232-C compatible cable CANNOT be substituted for the specified I/O cable.

- Primary flexible disk unit - If there are no other devices attached to IST parallel interface channel, connect 25-pin I/O cable (CDC 61408865) from parallel interface channel of IST terminal to either 25-pin I/O connector at rear of flexible disk unit. Connect terminator assembly (type FT116-A) to other 25-pin I/O connector of drive unit. Tighten retaining screws to hold cable connectors in place.

If other devices are already attached to IST parallel interface channel, remove terminator assembly from last device on channel and connect 25-pin I/O cable (CDC 61408865) between last device and either 25-pin connector at rear of flexible disk unit. Install the terminator assembly to other I/O connector of drive unit. Tighten retaining screws to hold cable connectors in place.

- Secondary flexible disk unit - Connect 50-pin I/O cable (CDC 61408976) between 50-pin connectors of primary and secondary flexible disk units. Note that 25-pin I/O connectors are not used on secondary unit.

- Verify that no flexible disk is installed in drive unit(s).

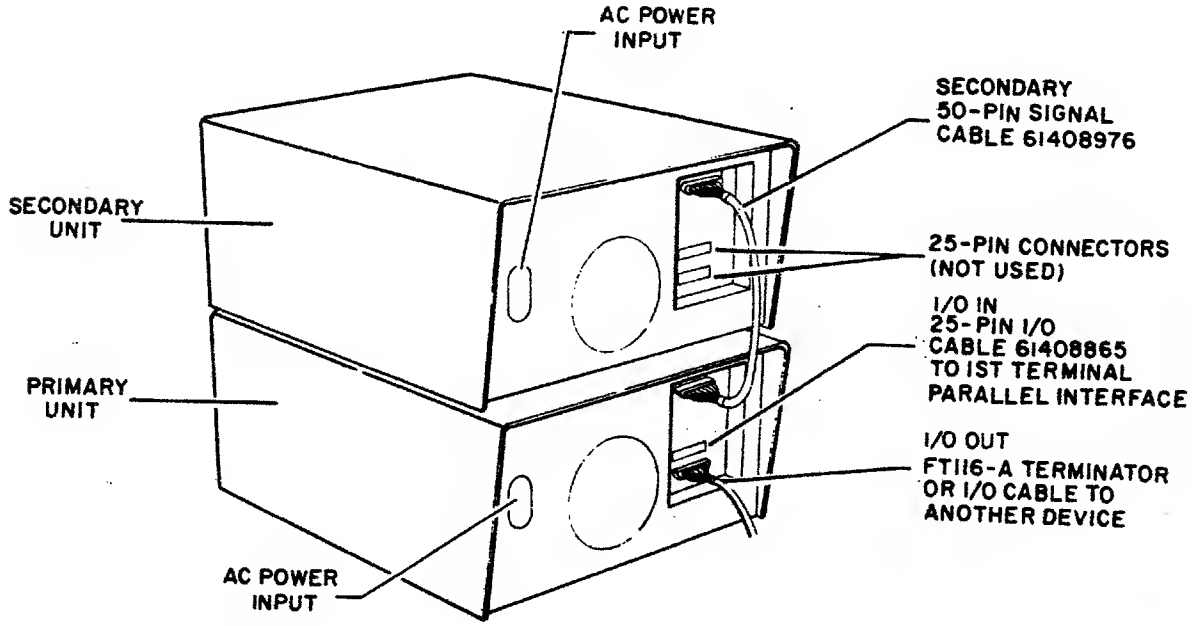

Figure 3-3. I/O Cable and Terminator Installation

6. Connect ac power cord to rear of unit, check that power on/off switch is in off position and plug ac line cord into site outlet.

WARNING

Applying improper voltage to the flexible disk subsystem can damage components. Read label on back of unit for proper voltage and frequency.

RAM OPTION INSTALLATION (Applies to FA501-A/B Only)

Perform the following steps to install a 16K by 8-bit RAM option (XA243-A). Up to three RAM options can be installed in a primary unit to expand the memory size to a total of 64K 8-bit words. Observe MOS circuit handling precautions described in section 6 when installing RAM ICs.

1. Remove controller board from unit.

2. Install RAM ICs in existing sockets on controller board as follows:

   - First RAM option in locations C1, C2A, C2B, C3, C4A, C4B, C5, and C6.

   - Second RAM option in locations D1, D2A, D2B, D3, D4A, D4B, D5, and D6.

   - Third RAM option in locations A1, A2A, A2B, A3, A4A, A4B, A5, and A6.

3. Set Diagnostic Controls Switches 2^4 and 2^5 to total RAM size available (see step 4 of Subsystem Installation for required switch settings).

4. Reinstall controller board in unit.

5. Afix FCO log and equipment identification tag to rear of unit as shown in figure 3-4.

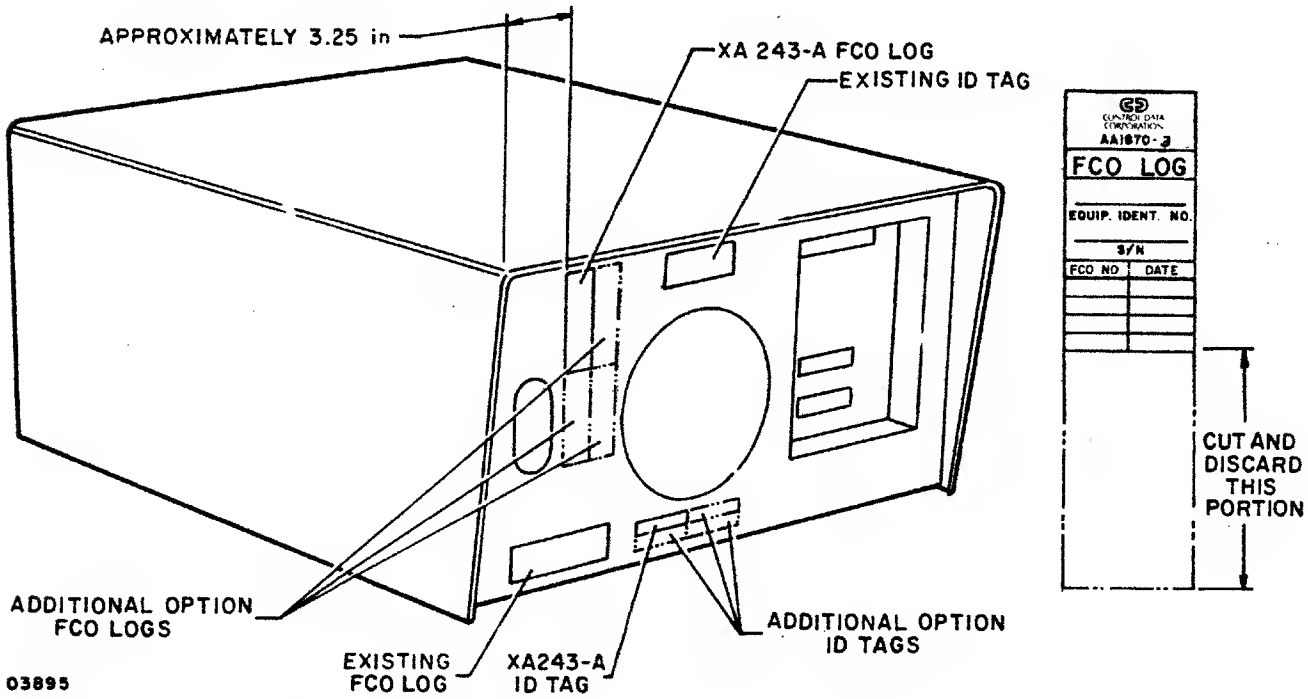

Figure 3-4. RAM Option FCO Log and ID Tag Placement

CHECKOUT

Perform the following steps to checkout the operational capability of the flexible disk subsystem including any installed options. If any problems are encountered, refer to the SAM listings in section 6A for corrective action.

1. Apply power to disk subsystem (procedure 1) and verify that four LEDs on power supply are lit (figure 3-5).

2. Observe four LEDS at front of controller board (figure 3-2). Immediately after turning power on (at start of diagnostic test execution) all four LEDs are turned on for a short period of time as an LED test. As the self-test diagnostic executes, the lower three LEDs indicate which test is in process. LED 2^3 lit indicates a diagnostic test error. Note that with no flexible disk installed, LEDs 2^0, 2^1, and 2^2 should be lit and LED 2^3 should be unlit indicating that diagnostic is at test 7 but drive is not ready.

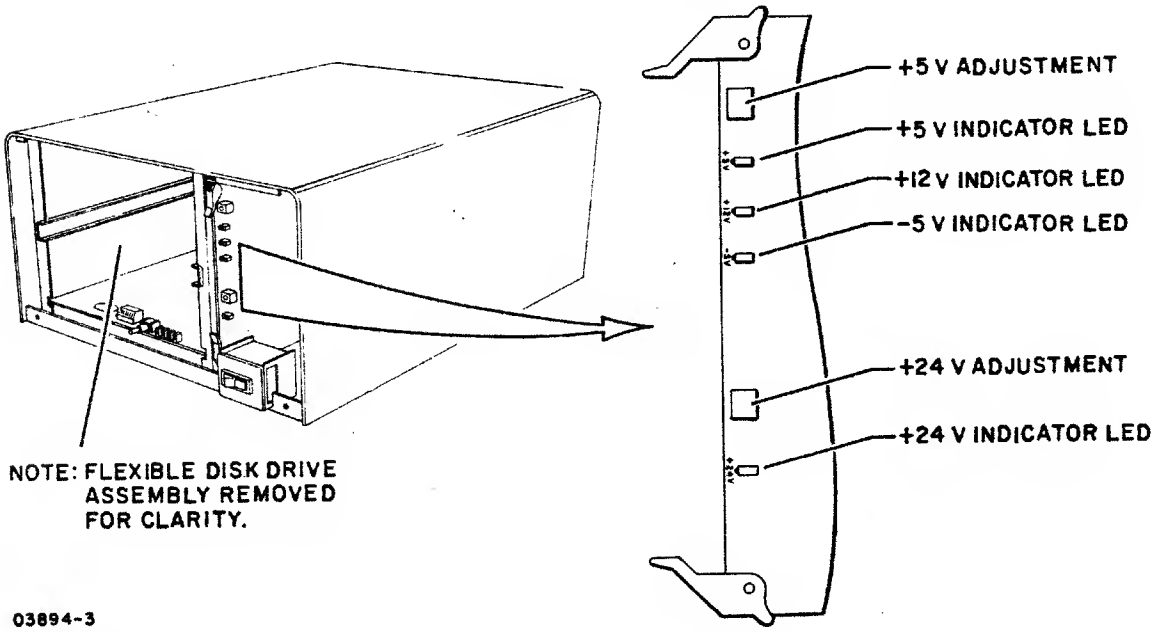

Figure 3-5. Power Supply Voltage Indicators

3. Install Micro Plato instructional flexible disk (CDC part number 76773000 A) in drive unit (procedure 2). This initiates write/read checks of test 7 (last resident diagnostic test). Upon successful completion, LED 2^0 remains lit and functions as a power-on indicator.

4. Remove Micro Plato instructional flexible disk from drive unit.

5. Verify that power is applied to last peripheral device connected to parallel interface channel. Note that last device must be powered on for correct operation of parallel interface channel as this device provides +5 volts to terminator.

6. Load and execute DIAG Flexible Disk Diagnostics from IST terminal as follows:

NOTE

For FA501-A/B terminals, the DIAG Flexible Disk Diagnostics only work with terminals having a 16K memory option.

NOTE

There are two modes of operation in the flexible disk subsystem that allow the terminal to load information into subsystem memory. One mode is via DMA operations and the other mode is via interrupt routines. Both operating modes are tested by the DIAG Flexible Disk Diagnostics.

For terminal log-in or diagnostic loading problems, refer to the applicable terminal hardware maintenance manual (see preface for publication number).

a. Log into PLATO system by use of procedures outlined in Information System Terminals II and III manuals (see Preface for publication numbers).

b. Select the Flexible Disk Diagnostic found under DIAG.

c. Follow the DIAG instructions for test desired.

7. After successful completion of preceding tests, check that all diagnostic control switches on controller board are set as required and reinstall front panel of unit (procedure 3). If Micro Plato instructional flexible disk (CDC part number 76773000 A) is being used, additional testing can be performed through use of stored programs on this disk. Refer to Micro Plato User's Installation Guide for test information (see preface for publication number).

O

This section provides a functional description of the five major elements of the flexible disk subsystem:

- AC Power Entry Panel
- Power Supply
- Backplane
- Flexible Disk Drive (FDD) Assembly
- Controller Board (Primary Units Only)

Also provided are the connector pin assignments for the external parallel I/O channel and secondary flexible disk unit interfaces, and the connector pin assignments for the internal signals of the flexible disk subsystem.

Refer to figure 4-1 for location of the major elements within the subsystem and to figure 4-2 for a block diagram of the subsystem configuration.

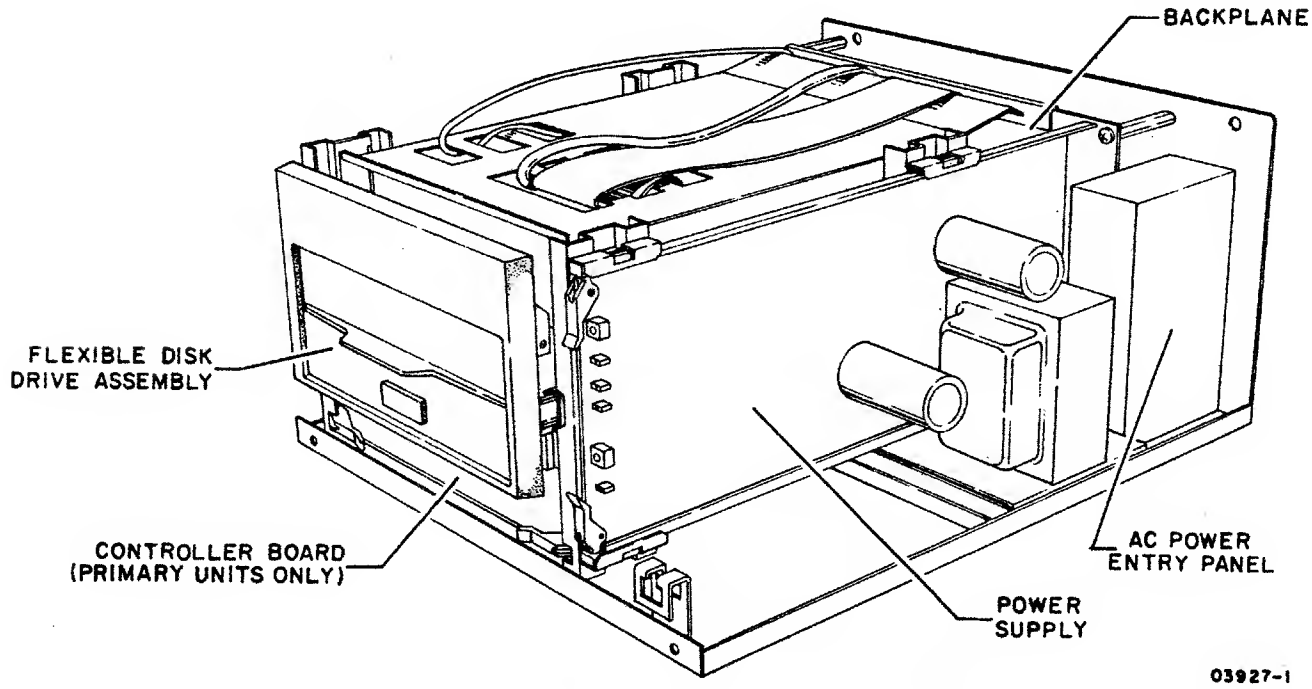

NOTE: COVER AND FRONT PANEL REMOVED FOR CLARITY.

Figure 4-1. Major Elements of Subsystem

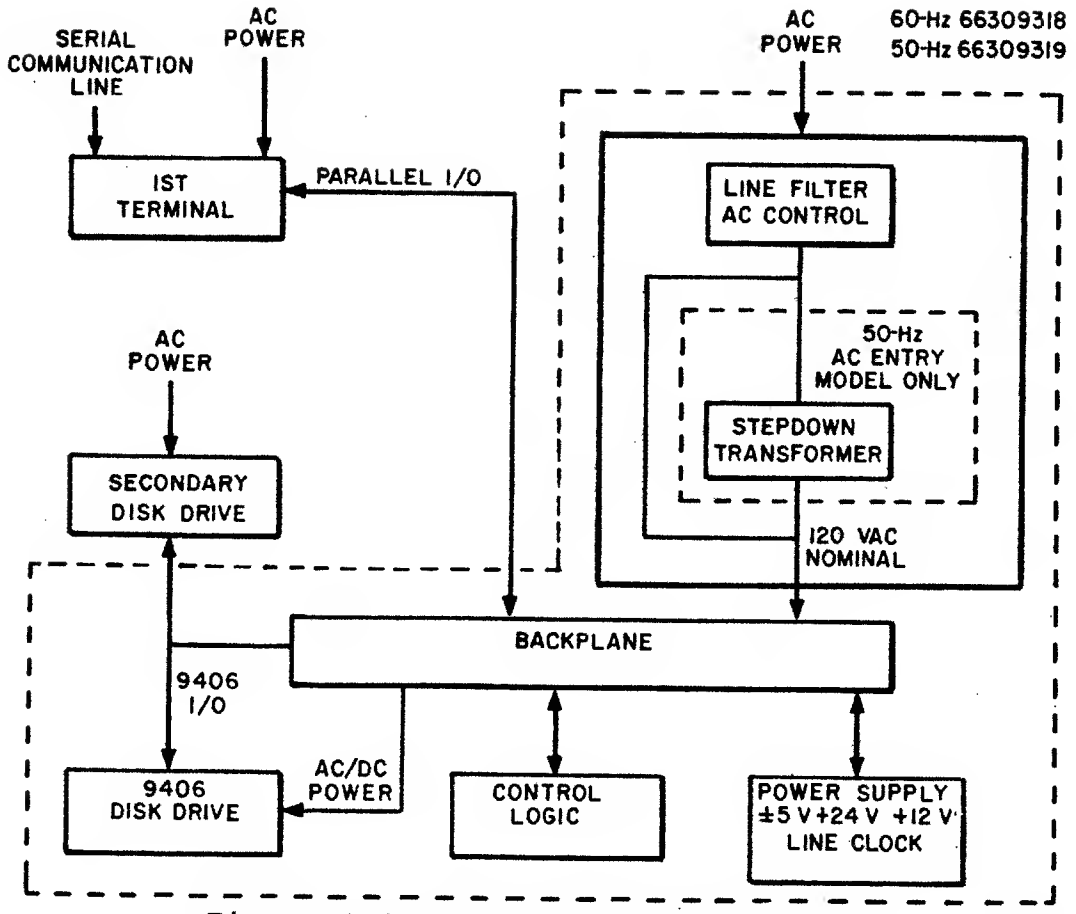

Figure 4-2. Subsystem Block Diagram

AC POWER ENTRY PANEL

The ac power entry panel contains an RFI line filter and a detachable ac power cord. A separate ac power entry panel is used for the 60-Hz and 50-Hz equipments. The 50-Hz panel also contains a step-down transformer and a 220/240-volt selector switch. Early versions of both the 60-Hz and 50-Hz panels contained the primary power circuit breaker. Later versions have the circuit breaker mounted at the front of the unit.

POWER SUPPLY

The power supply is a switching supply contained on a single PC card. Input voltage is 120 V ac nominal. The 50-Hz units require an external step-down transformer (provided by the 50-Hz ac entry panel) to lower the 220-V/240-V ac input voltage to 120 V. The power supply provides the following nominal dc output voltages and full-load currents:

- +12 V at 0.45 A
- -5 V at 0.1 A
- +5 V at 5 A
- +24 V at 2 A

The power supply is divided into two basic sections, a +24-V section, and a logic voltage section for the +12-V, +5-V, and -5-V output voltages. All dc outputs have over-current protection and are not damaged by short circuits. The +5-V output has an over-voltage sensing circuit that shuts off all outputs when the +5-V output rises between +5.5 V to +6.0 V. No other outputs have over-voltage protection.

The input ac line voltage is full-wave rectified and is chopped at a high-frequency rate (25 to 40 kHz) through the primary of the input transformer by a switching transistor. The transformer steps down the high-frequency ac to the secondary windings. These ac voltages are then rectified and filtered to provided the various power supply outputs.

Voltage control is performed in each power supply section by a regulator IC that compares a sample of the output voltage to an internal reference voltage. A resulting error difference is used to control the conduction time of a switching transistor through an optical coupler. Only the +24-V and +5-V output voltages are sensed to control the switching transistor pulse width in their respective power supply section. All other outputs have 3-pin IC regulators to regulate their output voltages.

The power supply contains four red board-edge LEDs that indicate the presence of the +24-V, +12-V, +5-V, and -5-V outputs. Two adjustment potentiometers are also provided for adjusting the +24-V and +5-V outputs. Test points on the board edge of the controller board are to be used when performing the +5-V alignment procedure. The +12-V, +5-V, and -5-V test points are available on the controller board edge.

BACKPLANE

A printed-circuit mother-board backplane provides the internal signal and power connections for the various modules of the disk subsystem and provides the external I/O channel interface connections.

FLEXIBLE DISK DRIVE (FDD) ASSEMBLY

The flexible disk drive (FDD) assembly is a random-access, data-storage device that writes and reads data from a rotating flexible disk. All input/output data and control operations are performed under microprocessor control from the controller board. The basic function of the drive assembly is to indicate to the controller when it is ready for operation, and respond to controller commands to:

- Receive and generate control signals
- Position the read/write heads to selected tracks
- Write or read data on the flexible disk when selected

Signals received and transmitted by the FDD are shown in figure 4-3. All signals received by the FDD are gated with Unit Select so that no stepping, reading, or writing can be performed on an unselected FDD. Also, all signals generated within the FDD, except the Ready signal, are gated with Unit Select so that no signals can be transmitted from an unselected FDD.

Controller Step and Direction commands initiate a track-seek operation on a selected FDD. The FDD transmits Index pulses as long as it selected. The selected FDD also transmits a Track 00 signal to the controller whenever the read/write heads are at Track 00.

Positioning of the carriage-mounted read/write heads is accomplished by a band-driven stepper motor. Each step command increments the stepper motor which moves the band. The band increments the read/write heads one track position for each step command.

During a write operation, the selected FDD receives Head Select, Write Enable, Write Data, and Low Current (Track 43 or greater) signals. If a write fault occurs, a Write Fault signal is transmitted to the controller. During a read operation, the selected FDD receives a Head-Load command. The Write Enable line remains high thereby specifying a read operation and the FDD transmits Composite Read Data signals to the controller.

A read or write operation begins by placing the read/write heads in contact with the flexible disk with a Head-Load command at the desired track. To write on the disk, a Write Enable is sent by the controller to condition the write logic. The write current then in the head reverses polarity synchronously with

the low-to-high transitions of the Write-Data pulses from the controller. The current reversals cause magnetic flux reversals on the desired disk track. Erasure of previously recorded data is simultaneously accomplished during the writing operation in addition to a delayed-tunnel erase, which ensures disk interchangeability.

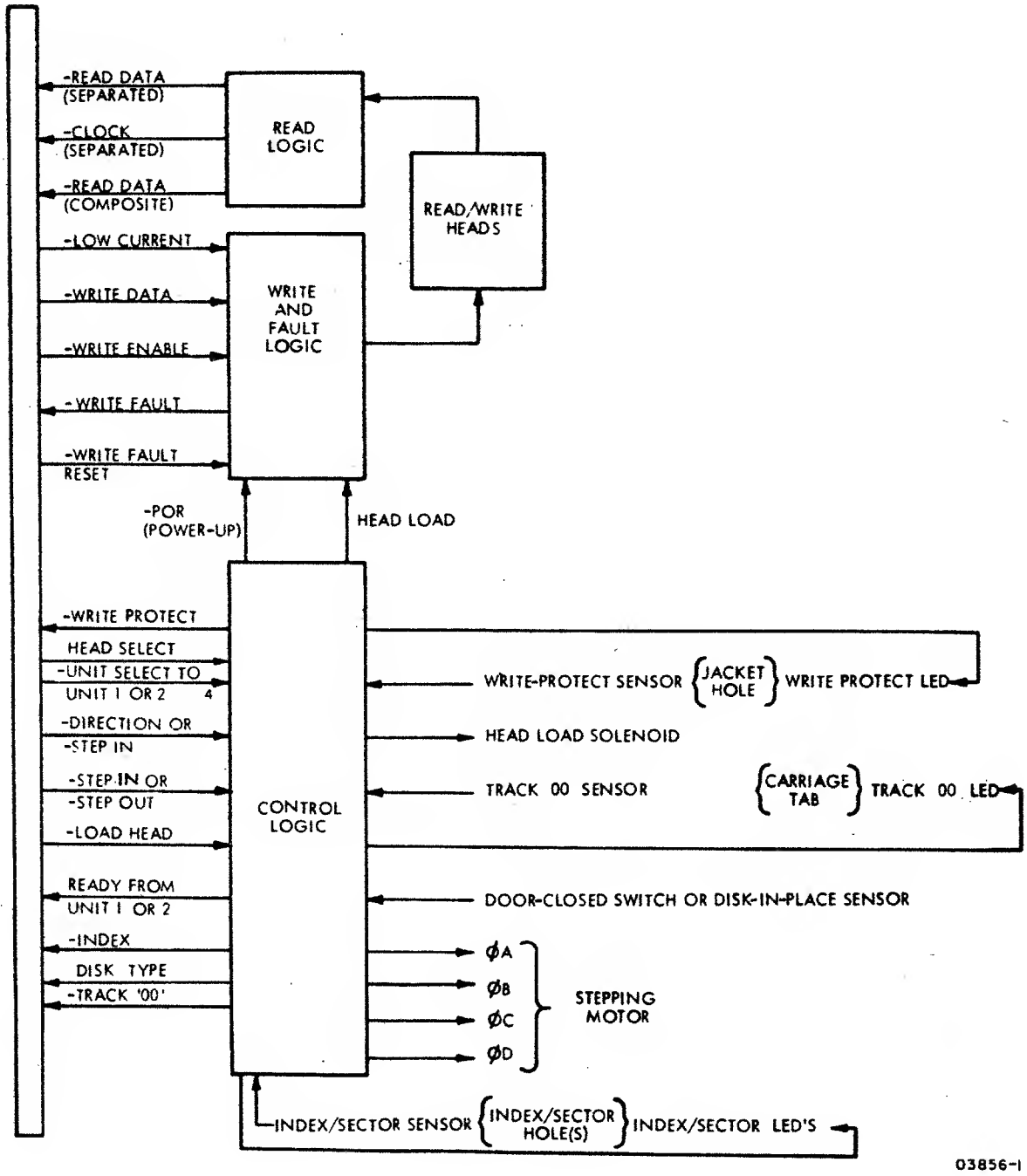

Figure 4-3. Drive Assembly Functional Block Diagram

To read from the flexible disk, magnetized bits in the format of the pre-recorded data are sensed by the read/write heads. This signal is amplified, digitized, and transmitted to the controller.

Refer to the 9406 Flexible Disk Drive Assembly Hardware Maintenance manual for additional information (see preface for publication number).

CONTROLLER BOARD (PRIMARY UNITS ONLY)

The controller board is present only in the primary units. A single controller board provides control and directs all operations of both a primary and optional secondary unit. This is accomplished by interfacing the controller board to both 9406 Disk Drive assemblies (primary and secondary) connected in parallel via an external 50-pin signal cable.

Large-scale integrated circuits (LSI) are used in all major areas of the controller's operation. This includes:

- A Z80A microprocessor clocked at 4 MHz.
- A 9517A-4 direct-memory-access (DMA) controller.
- A 1791A-02 flexible-disk controller (FDC).
- Two 2716 (2K by 8-bit) eraseable programmable read-only memorys (EPROM).
- A Z80 Counter/timer circuit (CTC).
- A 9519A interrupt controller.
- 16K by 8-bit bytes of random access memory (RAM). IC sockets are available for expansion to 64K by 8-bits for the FA501-A/B.
- 64K by 8-bit bytes of random access memory (RAM) for the FA501-C/D.
- Three 74LS374 8-bit data latches for I/O data, status, and commands.

The controller board also includes eight switches that can be read by the microprocessor for control and option-available information, a device address strap for the PLATO parallel I/O channel, a master reset switch that provides its status to the control program, and four LEDs that provide visual status indications.

A detailed block diagram of the controller board is shown in figure 4-4. The following paragraphs describe the major logic circuits. Refer to the applicable vendor manuals for details of operation as required.

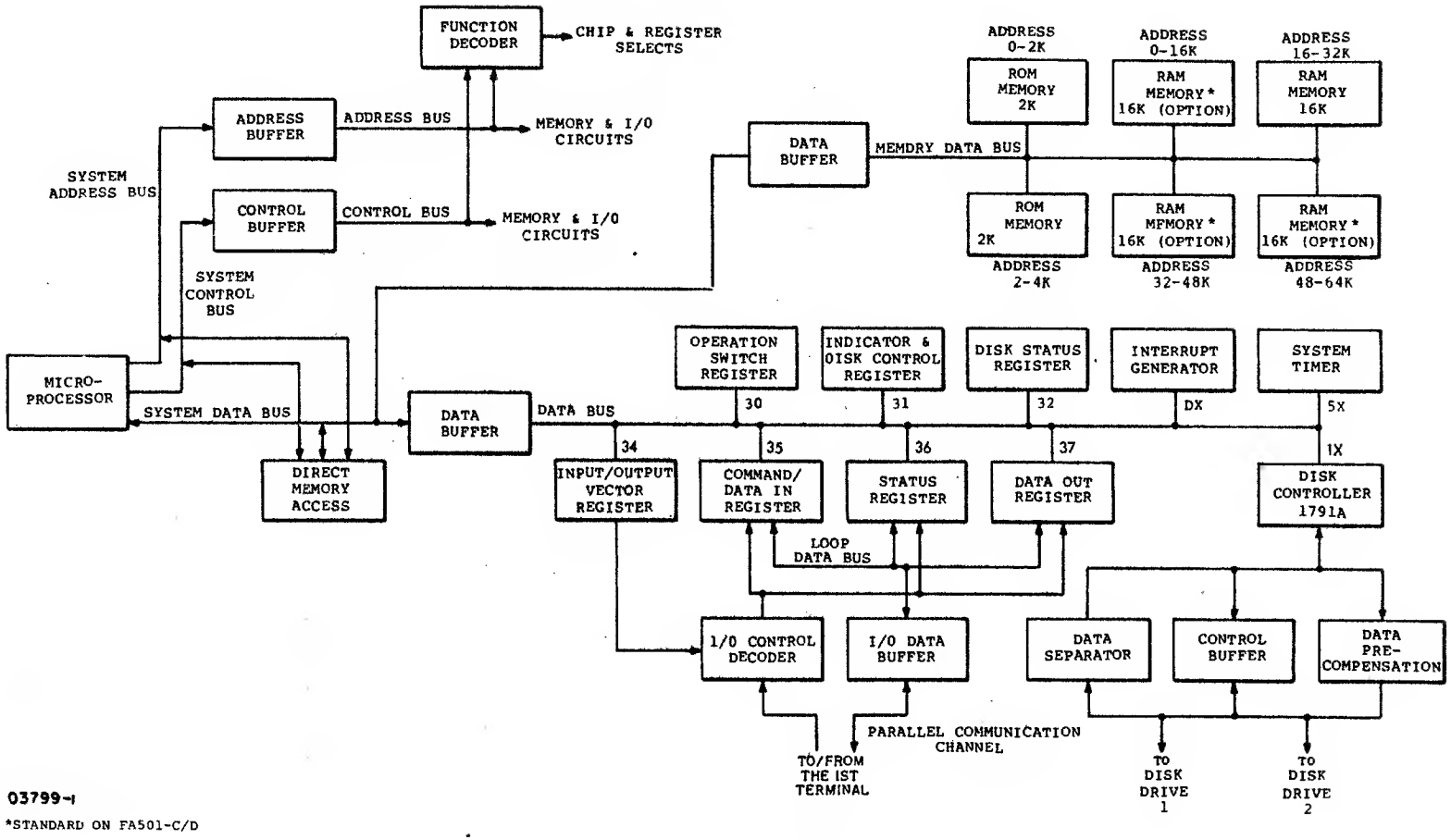

Figure 4-4. Controller Board Block Diagram

Z80A MICROPROCESSOR

A Z80A microprocessor is used as the major control element of the module. The Z80 provides three major buses (16-bit address bus, 8-bit bi-directional data bus, 13-line control bus); 158 different instructions; 208 bits of read/write memory; two sets of data, control, and address registers; an arithmetic and logic unit (ALU); and necessary instruction decode and control logic.

As each instruction is read from memory, it is placed in an instruction register and decoded. The internal control logic performs this function and then generates all the necessary control signals to read/write data from or to the registers, controls the ALU, and provides all required external control signals.

All instructions are executed by stepping through a specific series of basic control operations applicable to a given instruction.

Each basic control operation - such as OP code fetch, memory read, memory write, etc. - takes from three to six clock periods to complete and may be lengthened to synchronize the CPU to the speed of external devices. The additional clock periods are termed wait states and increase the total instruction execution time accordingly. The CPU examines the Wait line during T2 (and every subsequent TW) of each machine cycle and adds in a wait state of one clock period if the Wait signal is active.

Accessing RAM memory on the controller board does not require any addition of wait states. The EPROM memory, used only for the initial power-on diagnostics and autoload, requires the addition of one wait state for each memory reference. The 1791A flexible disk controller requires one wait state for each reference made to it by the Z80. The Write Fault Reset to the 9406 Flexible Disk Drive assembly requires one wait state.

9517A-4 DIRECT-MEMORY-ACCESS (DMA) CONTROLLER

The 9517A-4 direct-memory-access (DMA) controller is a peripheral interface IC that allows direct memory access to the subsystem RAM. Four independent DMA channels are provided. Each channel is designed to enable an external device to transfer information to or from the subsystem memory. In the flexible disk subsystem design, however, only three channels are wired for external device use. Channels 1 and 3 are both used by the 1791 flexible disk controller IC, and channel 2 is used by the PLATO parallel I/O channel. Channel 0 is not used.

Separate internal registers are provided in each channel for mode control, current address, base address, current word count, and base word count.

1791A-02 FLEXIBLE DISK CONTROLLER (FDC)

The 1791A-02 flexible disk controller (FDC) performs the functions of a flexible disk formatter and controller in a single integrated circuit. The FDC controls both single-density and double-density formatting. The FDC provides a 16-bit cyclic redundancy check (CRC) with the polynominal: $G(X) = X^{16} + X^{12} + X^5 + 1$. The IC is designed for bidirectional one's-complemented data transfers. Therefore, all commands sent to the FDC, and status read from the FDC, must be transmitted and received by the Z80 as one's-complemented data. Data is complemented when written on the flexible disk and complemented when read off the flexible disk. Therefore, true data written to the FDC is also read from the FDC as true data.

It is possible to read and write to/from the FDC on a byte-by-byte basis for single-density storage. However, to operate in double density it is necessary to use the 9517A-02 DMA controller to maintain the proper data rate for flexible disk read/write operations.

2716 ERASABLE PROGRAMMABLE READ-ONLY MEMORY (EPROM)

The 2716 EPROM is a 16 384-bit (2K by 8-bit) ultraviolet erasable and electrically programmable read-only memory. The read access time for the IC is 450 ns. The standard subsystem EPROMs uses memory addresses 0000_{16} through $0FFF_{16}$.

The stored program in the EPROMs provides subsystem diagnostics that include LED testing, ROM checksum, LSI device testing, memory testing, disk read/write testing, autoload, and initial PLATO parallel I/O channel interfacing with the host terminal.

Z80 COUNTER/TIMER CIRCUIT (CTC)

The Z80 counter/timer circuit is a programmable IC with four 8-bit internal independent channels that provide counting and timing functions under control of the Z80 microprocessor. The Z80 can configure the CTC channels to operate under various modes and conditions as required. In either timer or counter mode, an 8-bit, Z80-readable down-counter indicates the number of counts-to-go until zero. Interrupts can be programmed to occur on the zero count of any channel. The interrupt logic provides automatic interrupt vectoring.

All four of the counter timer circuits have external enables that can be selected by the Z80. Three of the counters have count-zero outputs. Two of the outputs are wired to the inputs of two of the other counters. This provides the ability to cascade the network into two 8-bit counters or essentially one 16-bit counter for each two CTCs used. Each of the CTCs used as an enable to one of the other has an external logic signal wired to its own input (figure 4-5). One external input is the Head-Down-Load (HDL) signal that indicates the disk was instructed to lower its read/write head. The counters can then be programmed to time out the mechanical delay that will take place in the 9406 drive (approximately 40 milliseconds). The zero-count output is sent to the 1791 flexible disk controller IC as a status bit. This status input means that the read/write head should be on the disk surface. This status bit is called Head-Load Timing (HLT).

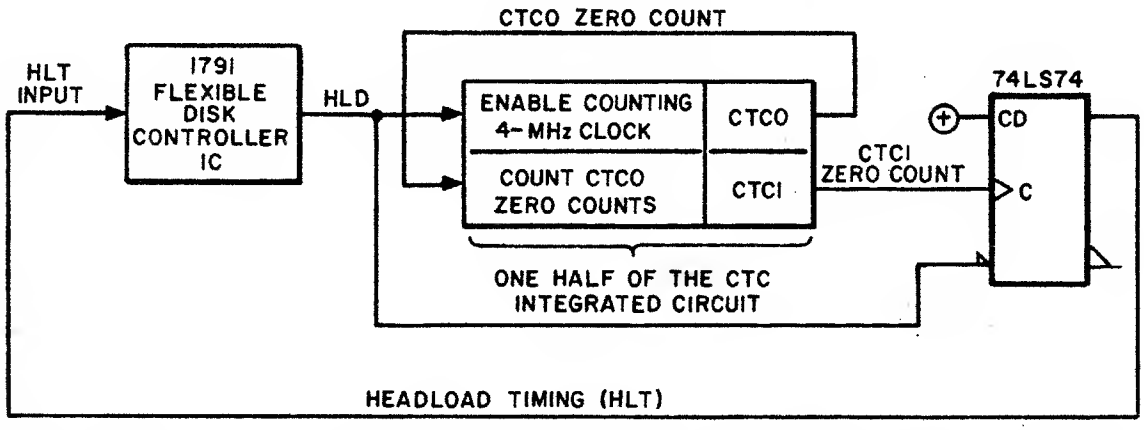

Figure 4-5. External Wiring of the CTC for Head-Load Timing

The other two CTCs of the integrated circuit are wired to allow them to be used for timing as a real-time clock. There is a circuit in the power supply that generates a pulse for every period of line voltage that occurs. This pulse is wired to the input of one of the CTCs (CTC2). The output of this CTC (CTC2) is wired as the input of the fourth CTC (CTC3). Together, these two CTCs provide a programmable down-counter 16 bits long (figure 4-6).

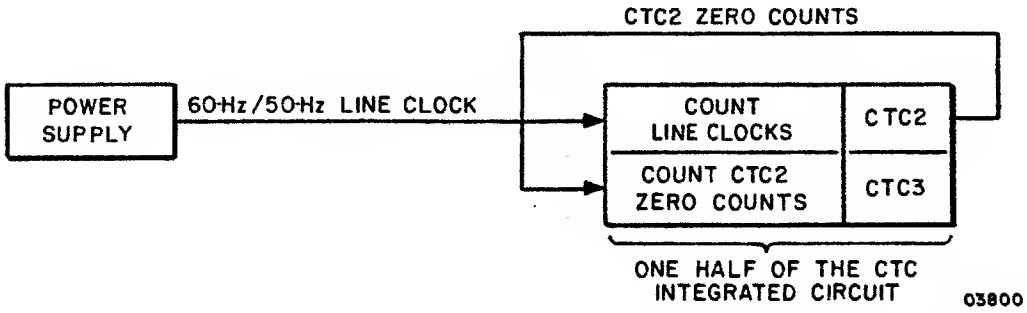

Figure 4-6. External Wiring of the CTC for Real-Time Clock

Note that it is possible to use the four CTC circuits in the CTC IC as four distinct timers by ignoring the input enables (selected only by program control) and use the four CTCs to count down the 4-MHz clock input to the IC.

9519 INTERRUPT CONTROLLER

The 9519 interrupt controller can manage up to eight maskable interrupt request inputs, resolve priorities, and supply up to four bytes of programmable response for each interrupt. The controller board only uses seven of these interrupts. They are:

- IREQ7 Not Used
- IREQ6 Line Clock
- IREQ5 DMA End of Processes
- IREQ4 1791 FDC Interrupt
- IREQ3 Parallel I/O Data Out (to the terminal)
- IREQ2 Parallel I/O Data In (from the terminal)
- IREQ1 Read Status (to the terminal)
- IREQ0 Write Command (from the terminal)

The interrupt network is shown in block diagram form in figure 4-7.

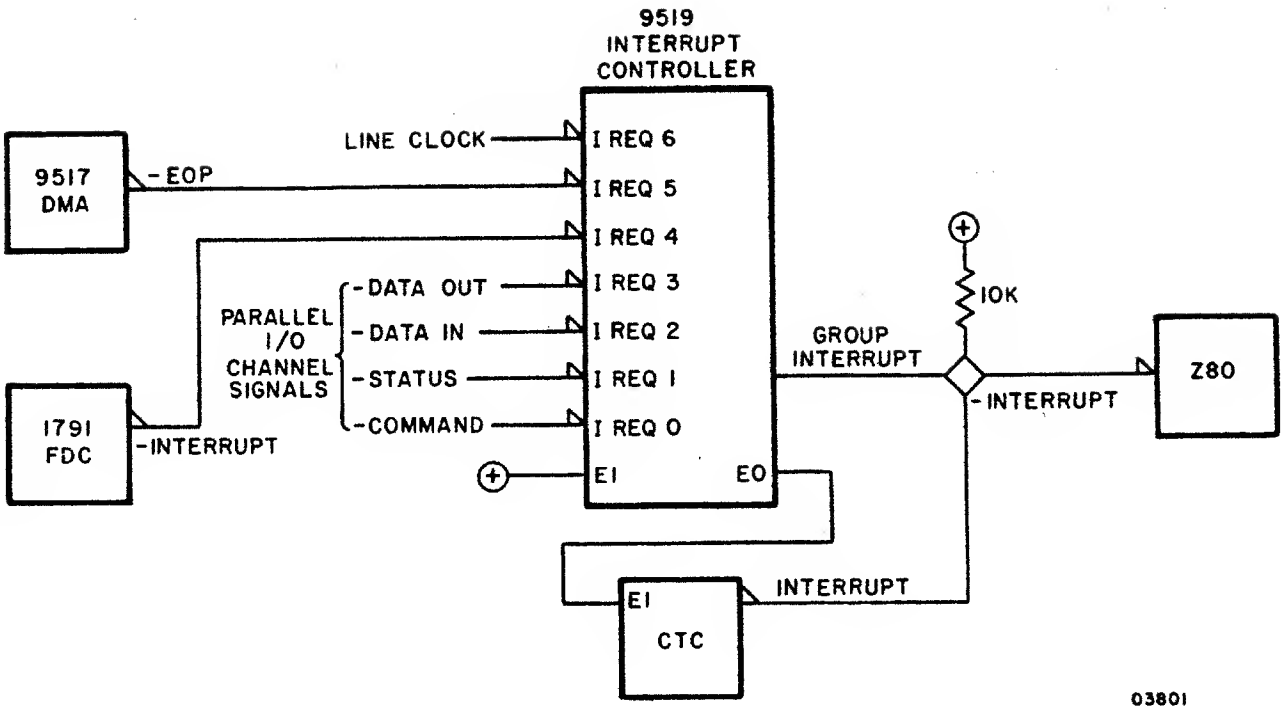

Figure 4-7. Flexible Disk Interrupt Network

EXTERNAL INTERFACE PIN ASSIGNMENTS

Tables 4-1 and 4-2 list the external interface pin assignments for the parallel I/O channel and secondary drive unit channel, respectively. Both of the interfaces use standard TTL-to-TTL circuits and logic levels. For external signal definitions, refer to the applicable hardware maintenance manual listed in the preface.

INTERNAL CONNECTOR PIN ASSIGNMENTS

Figure 4-8 shows the internal connector pin assignments for the flexible disk subsystem. For signal definitions, refer to the 9406 Flexible Disk Drive Hardware Maintenance Manual (publication number is listed in the preface).

TABLE 4-1. PARALLEL I/O CHANNEL PIN ASSIGNMENTS

Signal	In/Out	Active Level	Pin Number
Data 2^0	Both	High	J6, J7-15
Data 2^1	Both	High	J6, J7-16
Data 2^2	Both	High	J6, J7-17
Data 2^3	Both	High	J6, J7-18
Data 2^4	Both	High	J6, J7-21
Data 2^5	Both	High	J6, J7-22
Data 2^6	Both	High	J6, J7-23
Data 2^7	Both	High	J6, J7-24
+5 V (Terminator only)			J6, J7-13
Address 2^0	In	High	J6, J7-2
Address 2^1	In	High	J6, J7-3
Address 2^2	In	High	J6, J7-4
Address 2^3	In	High	J6, J7-5
Address 2^4	In	High	J6, J7-6
Not Used (in this device)			J6, J7-7
Not Used (in this device)			J6, J7-9
-External Write	In	Low	J6, J7-8
-External Read	In	Low	J6, J7-10
-External Interrupt	Out	Low	J6, J7-12
Not Used (in this device)			J6, J7-11
Ground			J6, J7-1
Ground			J6, J7-14
Ground			J6, J7-19
Ground			J6, J7-20
Ground			J6, J7-25

TABLE 4-2. SECONDARY DRIVE UNIT CHANNEL PIN ASSIGNMENTS

Signal	In/Out	Active Level	Pin Number*
-Read Data Composite	In	Low	J5-2
-Head Load	Out	Low	J5-4
-Track 00	In	Low	J5-6
-Index	In	Low	J5-8
-Low Write Current	Out	Low	J5-10
-Step	Out	Low	J5-12
-Direction (Increase)	Out	Low	J5-14
-Write Enable	Out	Low	J5-16
-Write Data	Out	Low	J5-31
-Unit Select 1	Out	Low	J5-33
-Unit Select 2	Out	Low	J5-29
-Unit Ready Status 1	In	Low	J5-50
-Unit Ready Status 2	In	Low	J5-48
-Write Protect	In	Low	J5-42
-Head Select (low = head 1; high = head 0)	Out	Low	J5-40
-Write Fault	In	Low	J5-38
-Write Fault Reset	Out	Low	J5-36
-Diskette Type (Two Sided)	In	Low	J5-34

*Pins 1, 3, 5, 7, 9, 11, 13, 15, 17, 18, 20, 22, 24, 26, 28, 30, 32, 35, 37, 39, 41, 43, 45, 47, and 49 are at logic ground; pins 19, 21, 23, 25, 27, 44, and 46 are open.

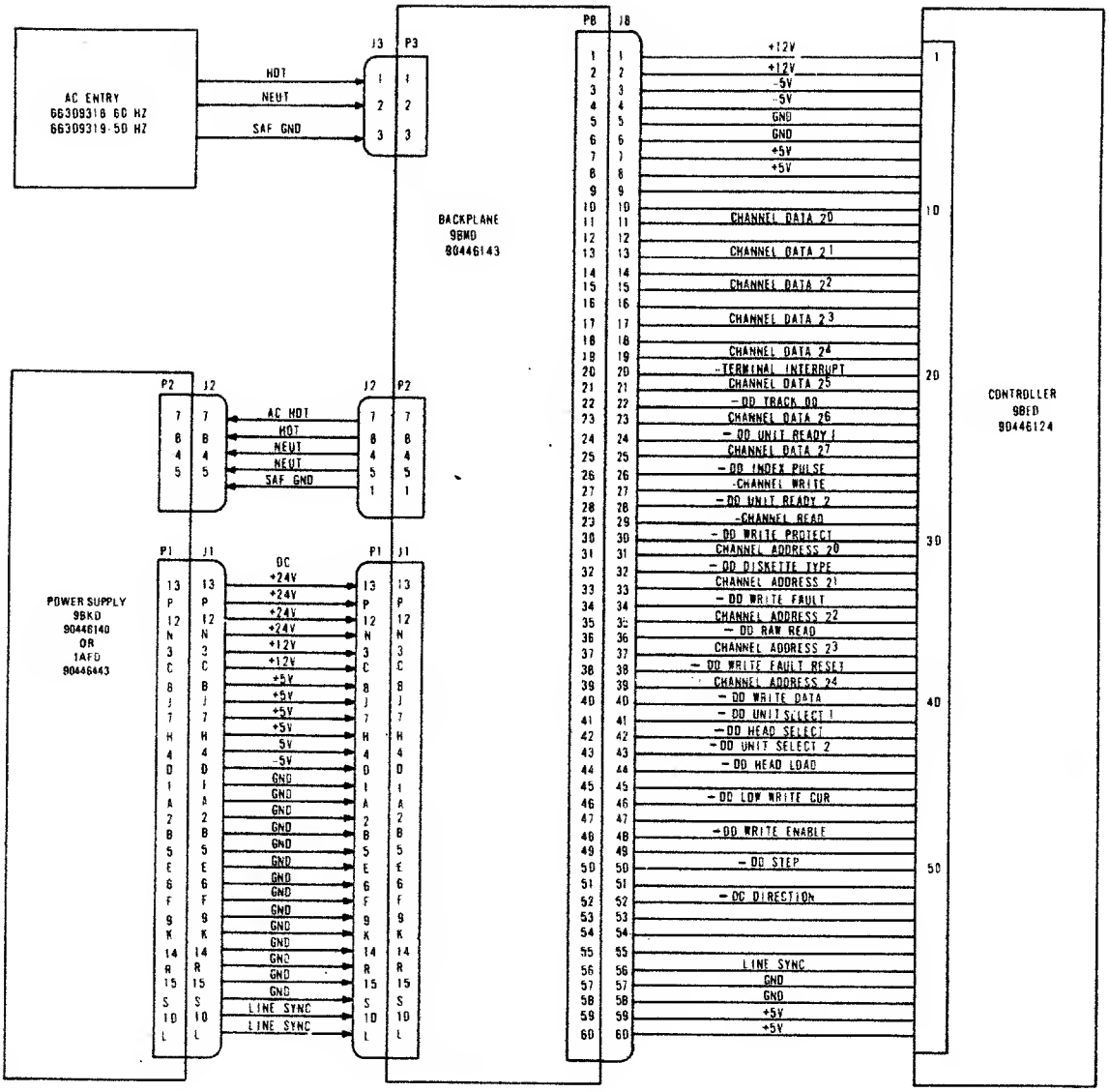

Figure 4-8. Internal Connector Pin Assignments

DIAGRAMS

This section contains logic and schematic diagrams for the controller board (9BED), power supply (9BKD), backplane (9BMD), and ac power wiring of the flexible disk subsystem. For logic diagrams on the drive unit, refer to the 9406 Flexible Disk Drive Hardware Maintenance Manual (publication number is listed in the preface).

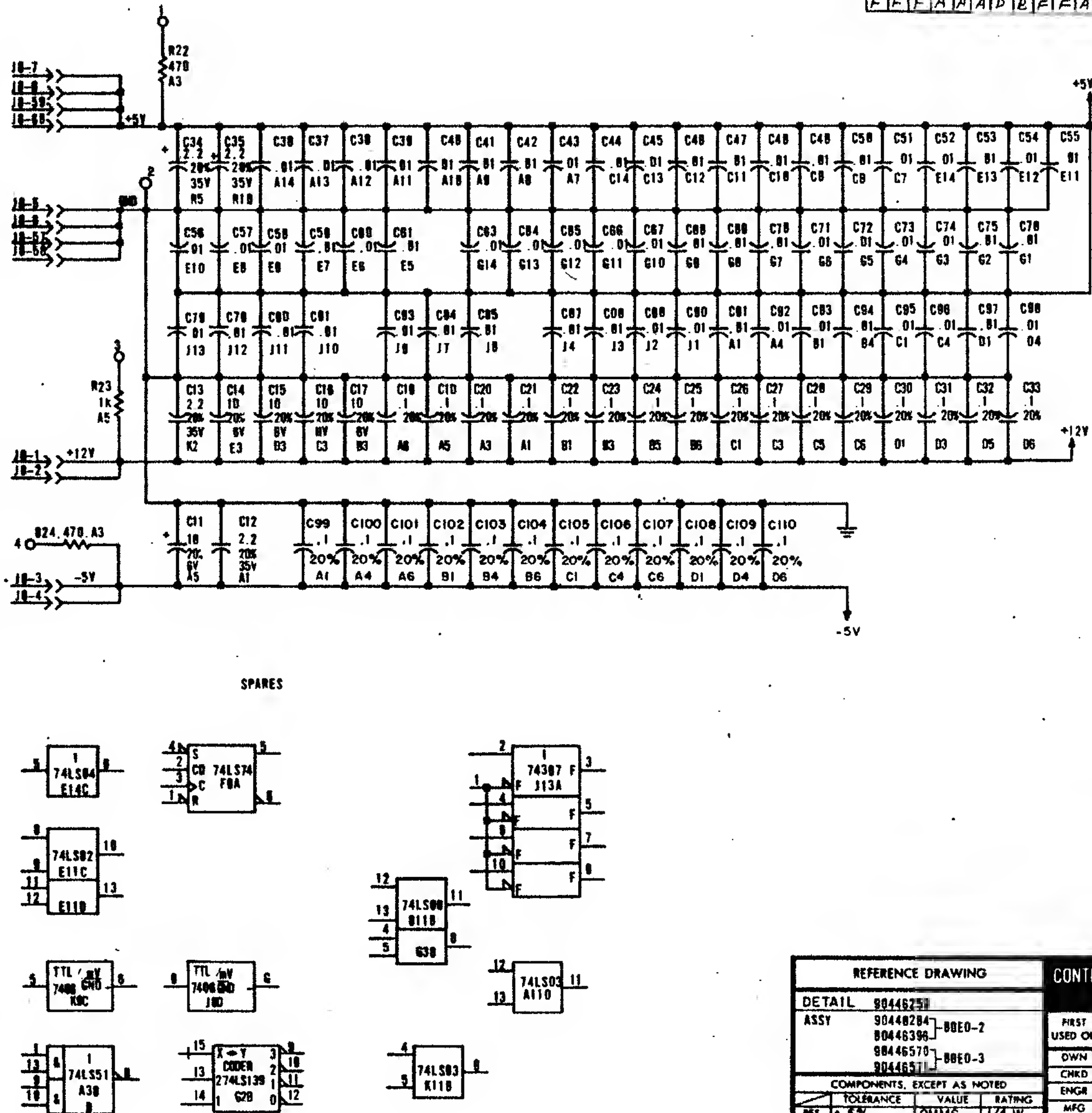

REVISION RECORD

SHEET REVISION STATUS 18	17	16	15	14	13	12	11	10	9	8	7	6	5	4	3	2	1	REV	CO	DESCRIPTION	DRFT	DATE	CHKD	APP
00	00	[illegible]	[illegible]	00	00	[illegible]	[illegible]	[illegible]	[illegible]	[illegible]	[illegible]	[illegible]	[illegible]	[illegible]	[illegible]	[illegible]	[illegible]	[illegible]	[illegible]	RELEASED CLASS [illegible]	–	12/18/80	—	[illegible]
A	A	A	A	A	A	A	A	A	A	A	A	A	A	A	A	A	A	A	134-144	RELEASED CLASS "A"	–	12/17/80	/	[illegible]
A	A	A	A	A	A	A	B	A	A	A	A	A	A	A	A	A	B	B	14469	REVISED PER ECO	EE	1/19/81	[illegible]	JOP
A	A	A	A	A	A	A	B	A	A	A	A	A	A	A	A	C	C	C	14571	REVISED PER ECO	WJG	3-2-81	WJG	[illegible]
A	A	A	A	A	A	D	B	A	A	A	A	A	A	A	A	C	D	D	14965	REVISED PER ECO	EE	1/8/82	EE	[illegible]
A	A	A	A	A	A	D	B	A	A	A	A	A	A	A	A	C	E	E	14985	ADD OPTIONAL RAM NOTE	EE	1-11-82	WJG	[illegible]
F	F	F	A	A	A	D	B	F	F	A	A	A	A	F	A	F	F	F	15771	REVISED PER ECO	EE	3/[illegible]/83	[illegible]	

NOTES:

OPTIONAL RAM EXPANSION IS STANDARD ON FA501 C/D.

1. UNLESS OTHERWISE SPECIFIED POWER AND GROUND PINS OF INTEGRATED CIRCUITS ARE AS LISTED BELOW:
   14 PIN INTEGRATED CKTS. PIN 14 = +5V. PIN 7 = GND.
   16 PIN INTEGRATED CKTS. PIN 16 = +5V. PIN 8 = GND.
   24 PIN INTEGRATED CKTS. PIN 24 = +5V. PIN 12 = GND.

2. CONTROL BLOCK INPUTS ARE SHOWN ONLY ONCE. BUT ARE CONNECTED IDENTICALLY TO MUX LOCATED AT B7 & C7

3. CONTROL BLOCK INPUTS ARE SHOWN ONLY ONCE. BUT ARE CONNECTED IDENTICALLY TO MEM. LOCATED AT A1. A2. A3. A4. A5. & A6

4. CONTROL BLOCK INPUTS ARE SHOWN ONLY ONCE. BUT ARE CONNECTED IDENTICALLY TO MEM LOCATED AT B1 B2. B3 B4. B5. & B6

5. CONTROL BLOCK INPUTS ARE SHOWN ONLY ONCE. BUT ARE CONNECTED IDENTICALLY TO MEM LOCATED AT C1. C2. C3. C4. C5 & C6

6. CONTROL BLOCK INPUTS ARE SHOWN ONLY ONCE. BUT ARE CONNECTED IDENTICALLY TO MEM LOCATED AT D1. D2. D3. D4. D5. & D6

7. UNLESS OTHERWISE NOTED ALL LEDS TO BE P N19171201

REFERENCE DRAWING	
DETAIL	90446258
ASSY	90446284, 90446396 – 9BED-2
	90446570, 90446571 – 9BED-3

COMPONENTS, EXCEPT AS NOTED	TOLERANCE	VALUE	RATING
RES	± 5%	OHMS	1/4 W
CAP	+80 -20%	μF	25V

CONTROL DATA

FIRST USED ON	FA501 BR810	
DWN	Mary Dietz	10/15/80
CHKD	[illegible]	10/15/80
ENGR	[illegible]	[illegible]
MFG	[illegible]	[illegible]
APPR	[illegible]	[illegible]

TITLE: SCHEMATIC DIAGRAM, 9BED

CODE IDENT 15920 — SIZE C — DRAWING NO 90446258

SCALE — CROSS REF NO — SHEET 1 OF 18

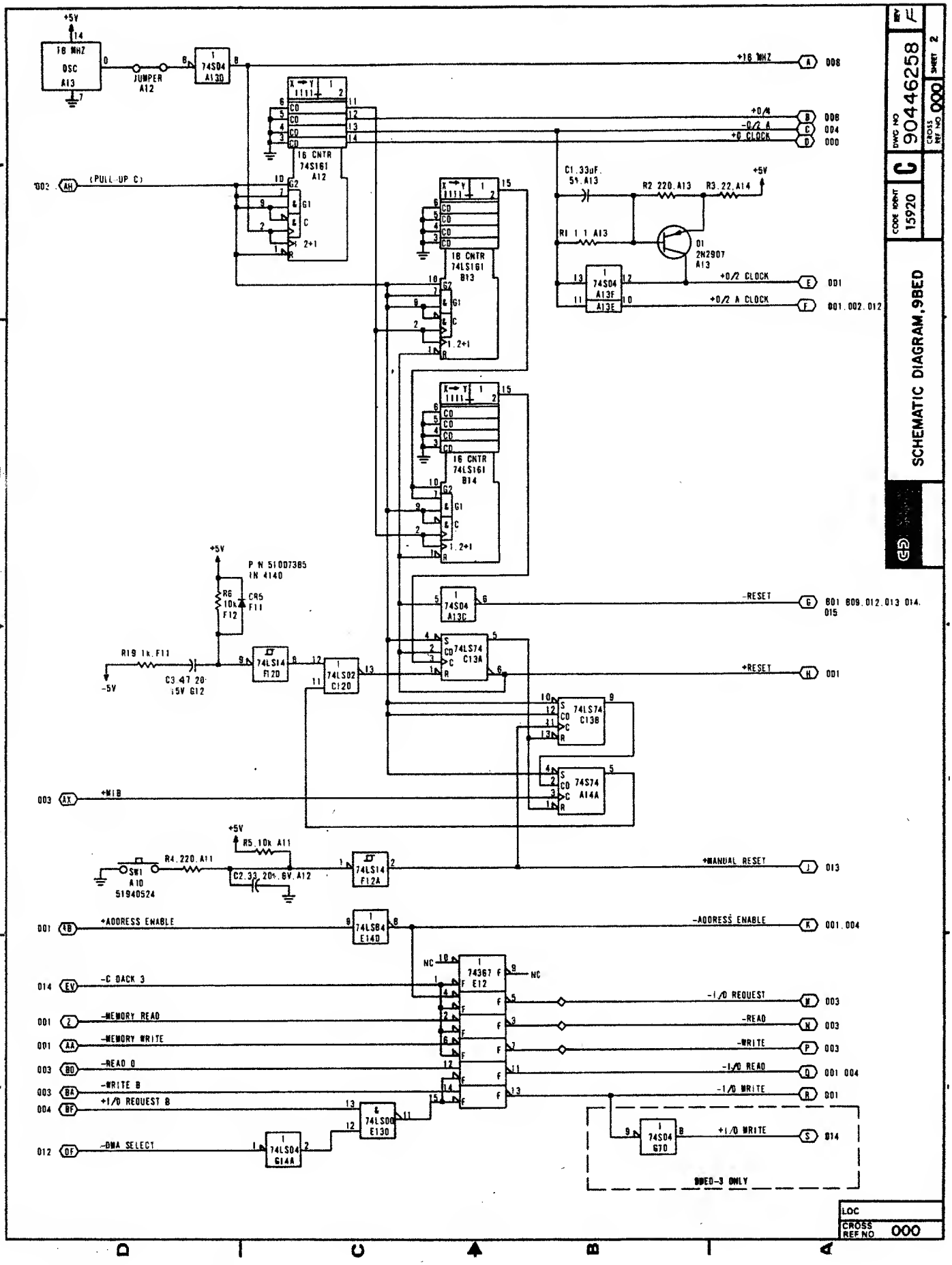
SCHEMATIC DIAGRAM,9BED
DWG NO 90446258
REV F
SHEET 2
CODE IDENT 15920
CROSS REF NO 000
LOC
CROSS REF NO 000
+5V
16 MHZ OSC A13
JUMPER A12
74S04 A13D
+16 MHZ
+D/4
-D/2 A
+D CLOCK
16 CNTR 74S161 A12
(PULL-UP C)
C1.33uF. 5V.A13
R2 220.A13
R3.22.A14
R1 1.1 A13
Q1 2N2907 A13
74S04 A13F A13E
+D/2 CLOCK
+D/2 A CLOCK
16 CNTR 74LS161 B13
16 CNTR 74LS161 B14
P N 51007385 IN 4140
R6 10k F12
CR5 F11
74S04 A13C
-RESET
R19 1k.F11
C3 47 20 15V G12
74LS14 F12D
74LS02 C12D
74LS74 C13A
+RESET
74LS74 C13B
74LS74 A14A
+MIB
R5.10k A11
R4.220.A11
SW1 A10 51940524
C2.33 20% 6V.A12
74LS14 F12A
+MANUAL RESET
+ADDRESS ENABLE
74LS84 E14D
-ADDRESS ENABLE
-C DACK 3
74367 E12
-I/O REQUEST
-MEMORY READ
-READ
-MEMORY WRITE
-WRITE
-READ 0
-I/O READ
-WRITE 0
-I/O WRITE
+I/O REQUEST B
74LS00 E13D
-DMA SELECT
74LS04 G14A
74S04 G7D
+I/O WRITE
9BED-3 ONLY

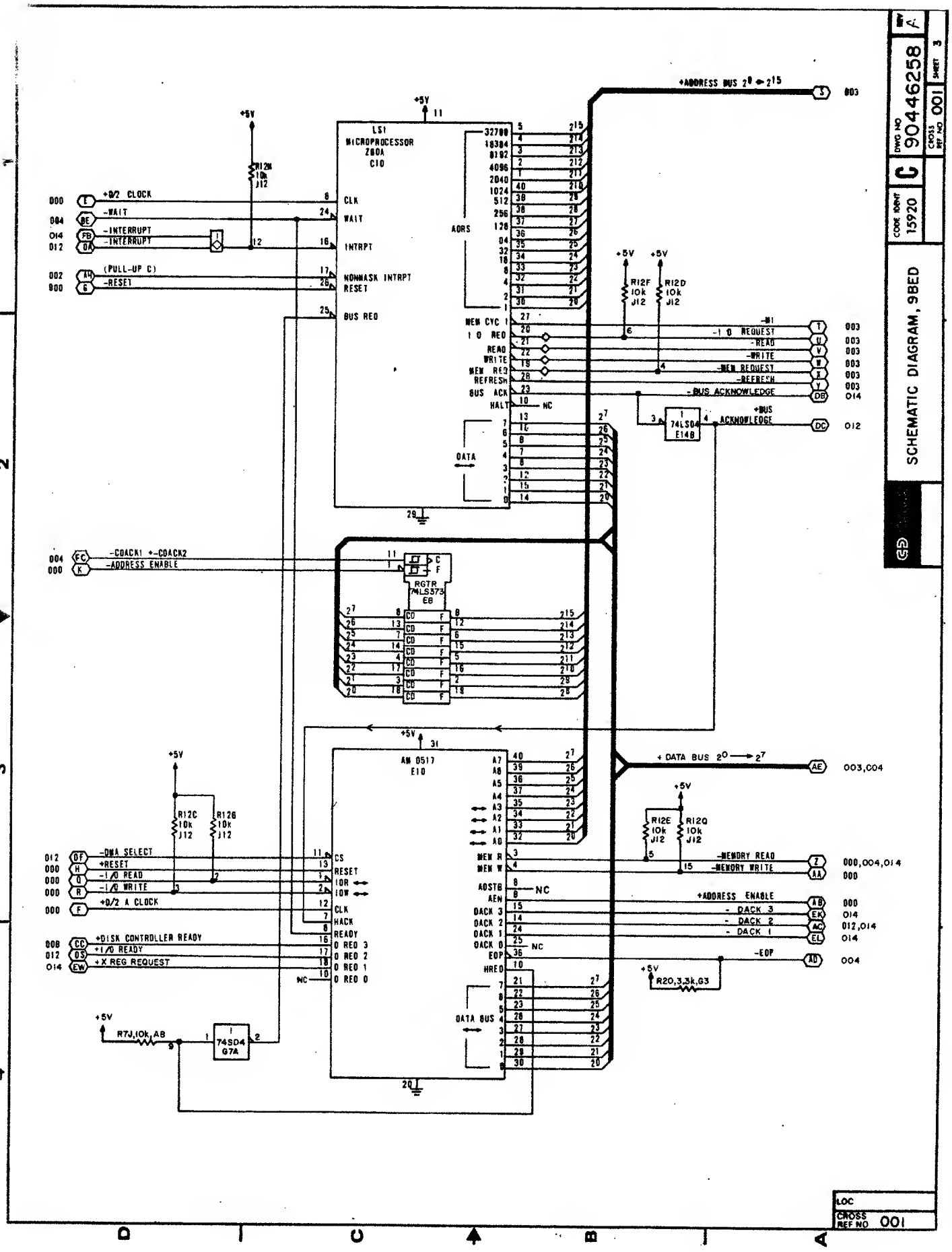
SCHEMATIC DIAGRAM, 9BED
DWG NO 90446258
CODE IDENT 15920
C
CROSS REF NO 001
SHEET 3
REV A
LSI MICROPROCESSOR Z80A CIO
+Ø/2 CLOCK
-WAIT
-INTERRUPT
-INTERRUPT
(PULL-UP C)
-RESET
CLK
WAIT
INTRPT
NONMASK INTRPT
RESET
BUS REQ
ADRS
MEM CYC
I O REQ
READ
WRITE
MEM REQ
REFRESH
BUS ACK
HALT
DATA
+ADDRESS BUS 2⁰ → 2¹⁵
-I O REQUEST
-READ
-WRITE
-MEM REQUEST
-REFRESH
-BUS ACKNOWLEDGE
+BUS ACKNOWLEDGE
74LS04 E14B
-COACK1 +-COACK2
-ADDRESS ENABLE
RGTR 74LS373 E6
AM 0517 E10
+ DATA BUS 2⁰ → 2⁷
-DMA SELECT
+RESET
-I/O READ
-I/O WRITE
+Ø/2 A CLOCK
CS
RESET
IOR
IOW
CLK
HACK
READY
O REQ 3
O REQ 2
O REQ 1
O REQ 0
MEM R
MEM W
AOSTB
AEN
DACK 3
DACK 2
DACK 1
DACK 0
EOP
HREQ
DATA BUS
-MEMORY READ
-MEMORY WRITE
+ADDRESS ENABLE
- DACK 3
- DACK 2
- DACK 1
-EOP
+DISK CONTROLLER READY
+I/O READY
+X REG REQUEST
74SD4 G7A
R7J,10k,A8
R20,3.3k,G3
LOC
CROSS REF NO 001

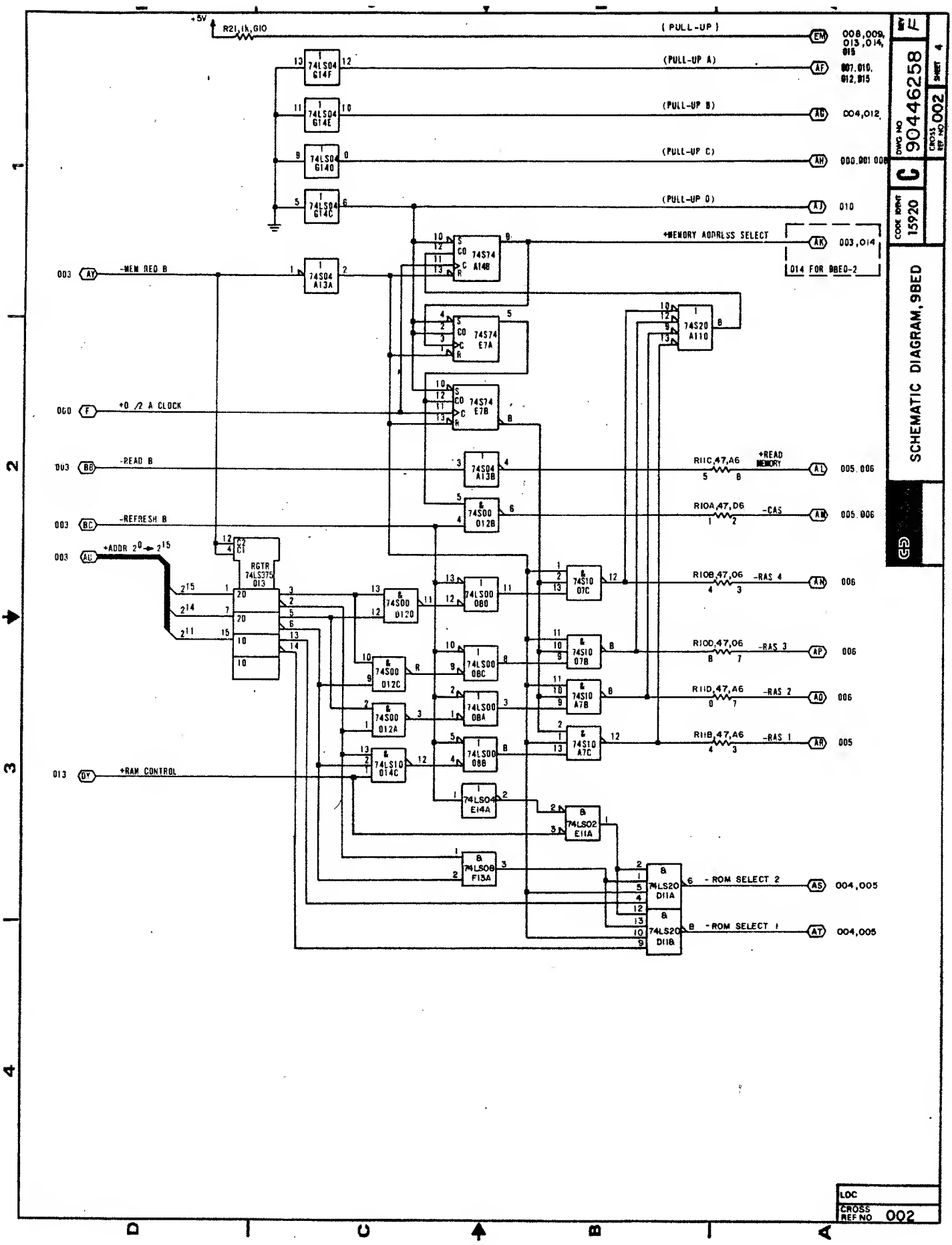
SCHEMATIC DIAGRAM, 9BED
DWG NO 90446258
CROSS REF NO 002
SHEET 4
REV F
CODE IDENT 15920
LOC
CROSS REF NO 002
+5V
R21,1K,G10
(PULL-UP)
(PULL-UP A)
(PULL-UP B)
(PULL-UP C)
(PULL-UP D)
+MEMORY ADDRESS SELECT
014 FOR 9BED-2
-MEM REQ B
+0 /2 A CLOCK
-READ B
-REFRESH B
+ADDR 2^0 → 2^15
+RAM CONTROL
RGTR 74LS375 013
+READ MEMORY
-CAS
-RAS 4
-RAS 3
-RAS 2
-RAS 1
- ROM SELECT 2
- ROM SELECT 1

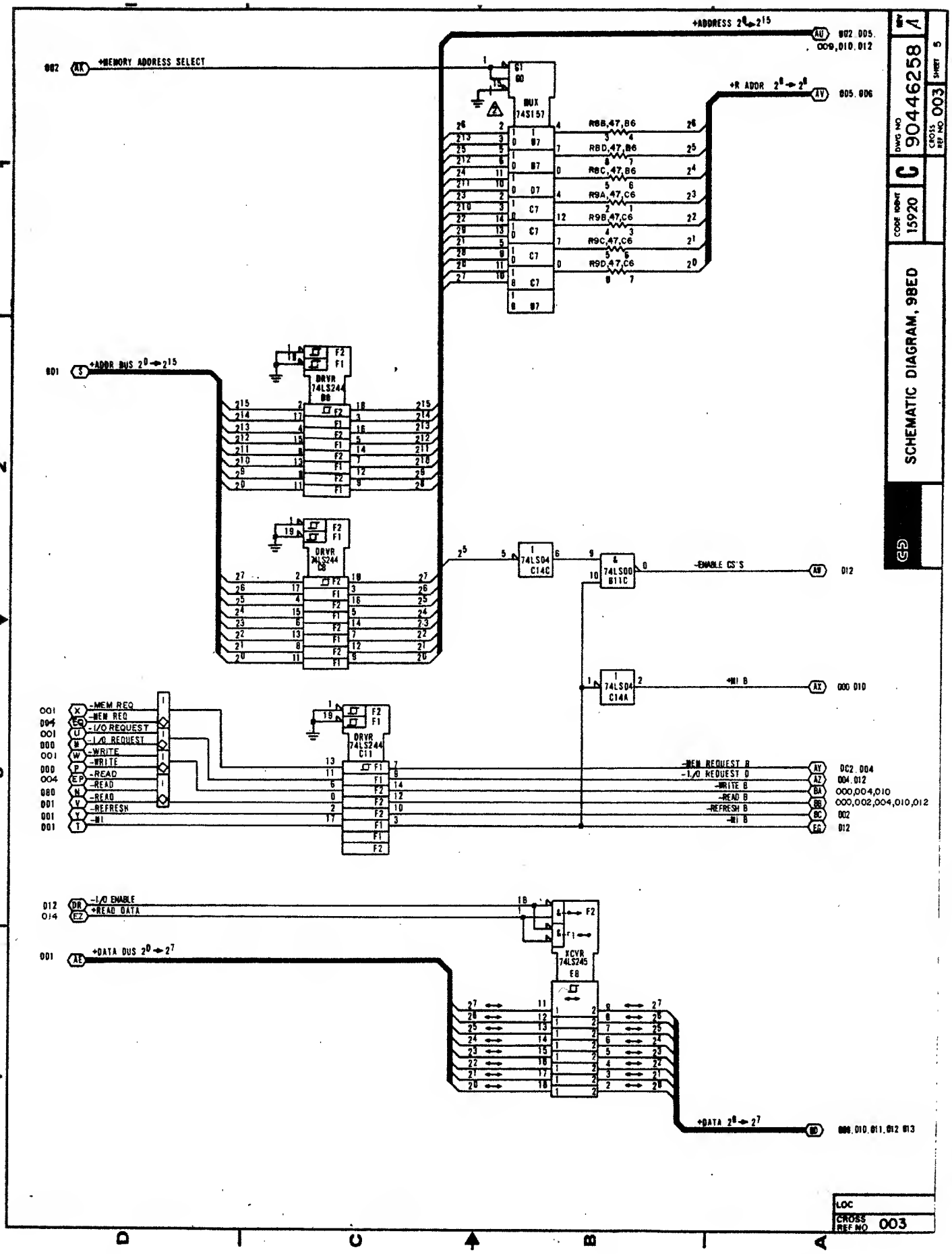
SCHEMATIC DIAGRAM, 98ED
DWG NO 90446258
CROSS REF NO 003
SHEET 5
CODE IDENT 15920
+MEMORY ADDRESS SELECT
+ADDRESS 2⁸→2¹⁵
+R ADDR 2⁸→2⁸
MUX 74S157
R8B,47,B6
RBD,47,B6
RBC,47,B6
R9A,47,C6
R9B,47,C6
R9C,47,C6
R9D,47,C6
+ADDR BUS 2⁰→2¹⁵
DRVR 74LS244
74LS04 C14C
74LS00 B11C
-ENABLE CS'S
74LS04 C14A
+MI B
-MEM REQ
-I/O REQUEST
-WRITE
-READ
-REFRESH
-MI
-MEM REQUEST B
-I/O REQUEST B
-WRITE B
-READ B
-REFRESH B
-MI B
-I/O ENABLE
+READ DATA
+DATA BUS 2⁰→2⁷
XCVR 74LS245 E8
+DATA 2⁸→2⁷
LOC
CROSS REF NO 003

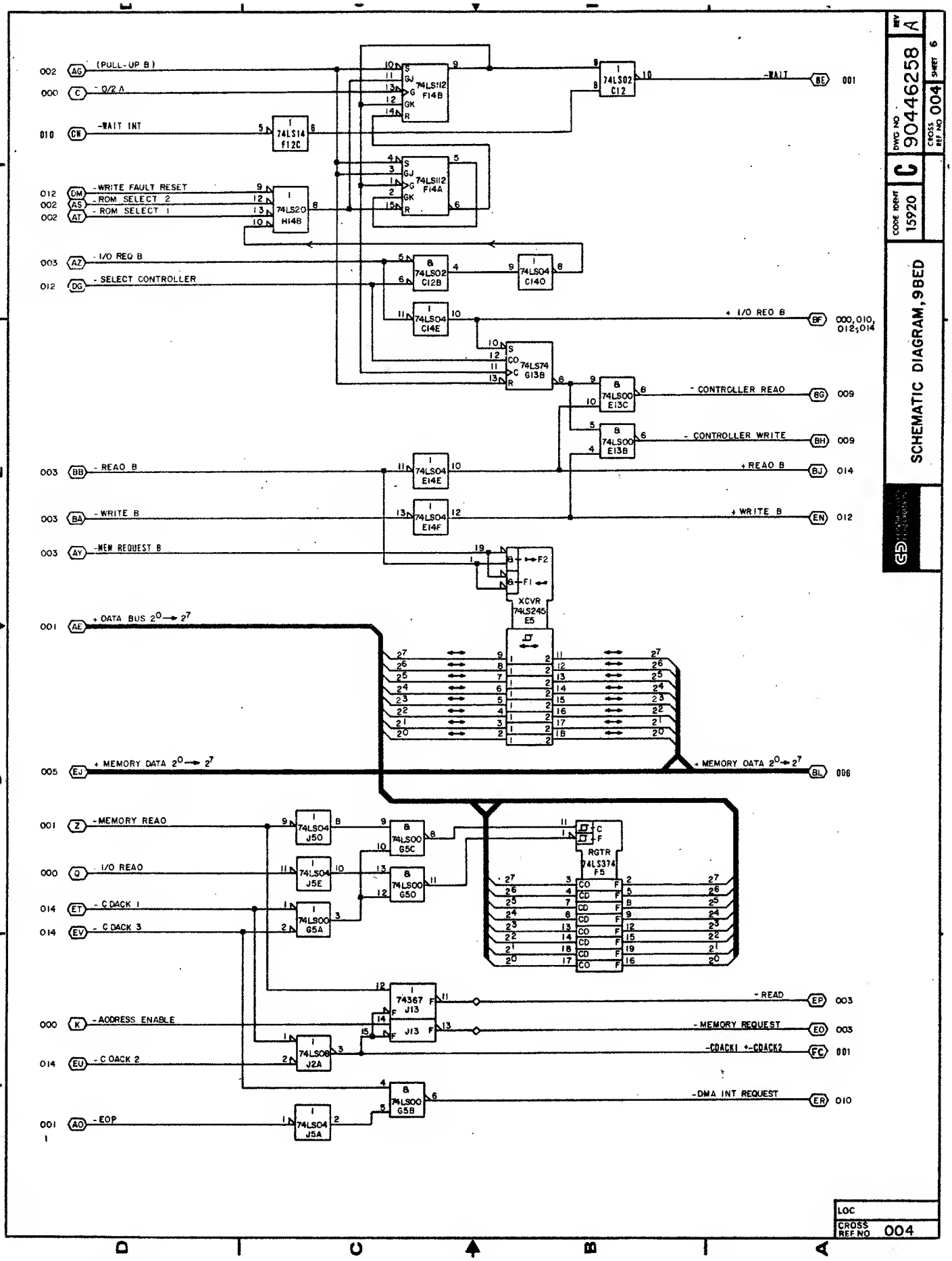
SCHEMATIC DIAGRAM, 9BED
DWG NO 90446258
REV A
SHEET 6
CROSS REF NO 004
CODE IDENT 15920
C
(PULL-UP B)
- Q/2 A
-WAIT INT
-WRITE FAULT RESET
- ROM SELECT 2
- ROM SELECT 1
- I/O REQ B
- SELECT CONTROLLER
- READ B
- WRITE B
-MEM REQUEST B
+ DATA BUS 2^0 → 2^7
+ MEMORY DATA 2^0 → 2^7
-MEMORY READ
- I/O READ
- C DACK 1
- C DACK 3
- ADDRESS ENABLE
- C DACK 2
- EOP
-WAIT
+ I/O REQ B
- CONTROLLER READ
- CONTROLLER WRITE
+ READ B
+ WRITE B
XCVR 74LS245 E5
RGTR 74LS374 F5
74LS112 F14B
74LS112 F14A
74LS14 F12C
74LS20 H14B
74LS02 C12
74LS02 C12B
74LS04 C14O
74LS04 C14E
74LS74 G13B
74LS00 E13C
74LS00 E13B
74LS04 E14E
74LS04 E14F
74LS04 J5O
74LS04 J5E
74LS00 G5A
74LS00 G5C
74LS00 G5O
74367 J13
74LS08 J2A
74LS00 G5B
74LS04 J5A
- READ
- MEMORY REQUEST
-CDACK1 +-CDACK2
-DMA INT REQUEST
LOC
CROSS REF NO 004

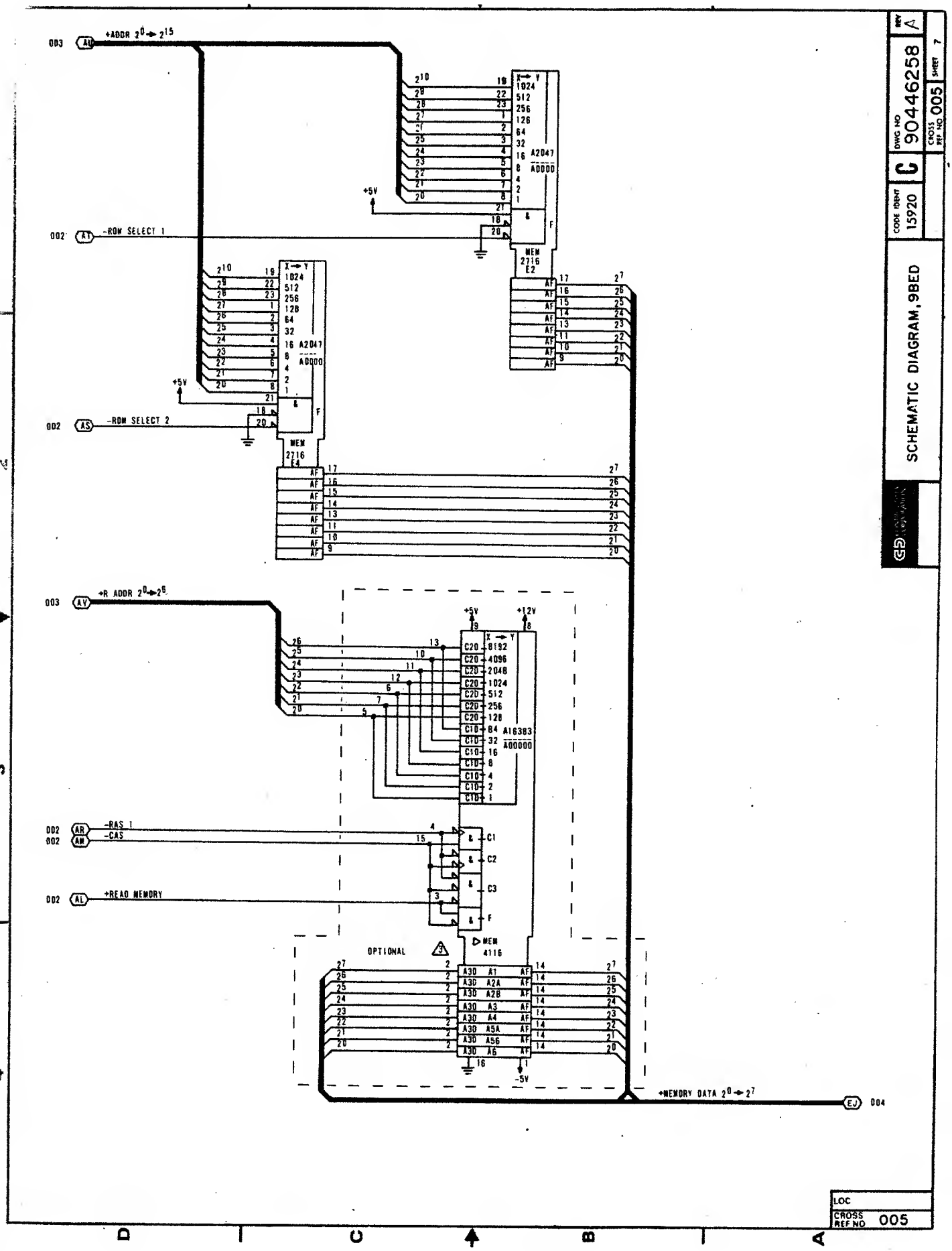
003 AU +ADDR 2^0 → 2^15
002 AT -ROM SELECT 1
002 AS -ROM SELECT 2
A2047
A0000
MEM 2716 E2
MEM 2716 E4
+5V
003 AV +R ADDR 2^0 → 2^5
+12V
A16383
A00000
002 AR -RAS 1
002 AM -CAS
002 AL +READ MEMORY
MEM 4116
OPTIONAL
-5V
+MEMORY DATA 2^0 → 2^7
EJ 004
SCHEMATIC DIAGRAM, 9BED
DWG NO 90446258
CODE IDENT 15920
CROSS REF NO 005
SHEET 7
REV A
LOC
CROSS REF NO 005

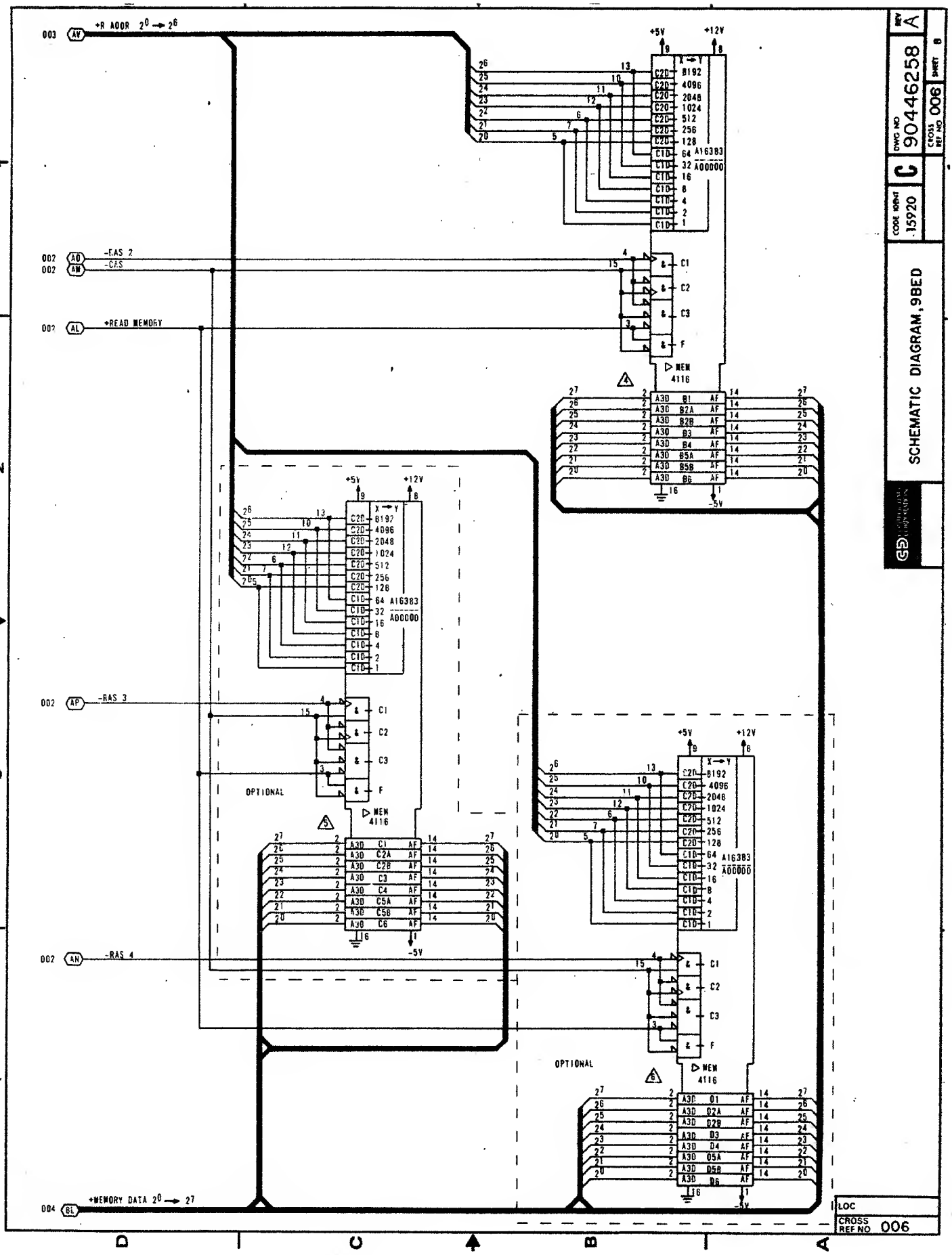
SCHEMATIC DIAGRAM, 9BED
DWG NO 90446258
CODE IDENT 15920
CROSS REF NO 006
SHEET 8
REV A
+R ADDR 2⁰ → 2⁶
-RAS 2
-CAS
+READ MEMORY
-RAS 3
-RAS 4
+MEMORY DATA 2⁰ → 2⁷
OPTIONAL
A16383
A00000
4116
LOC
CROSS REF NO 006

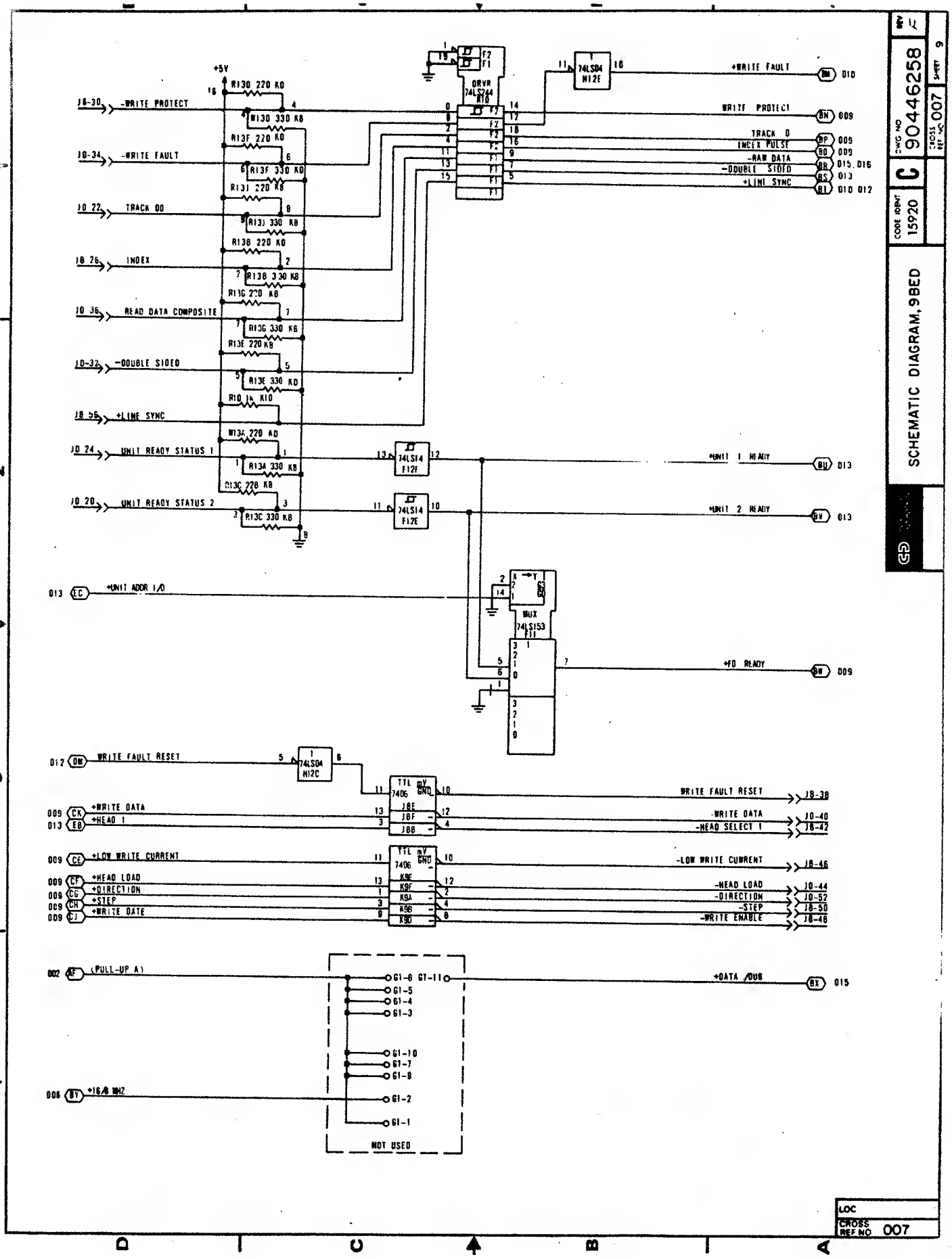
SCHEMATIC DIAGRAM, 9BED
DWG NO 90446258
CODE IDENT 15920
CROSS REF NO 007
SHEET 6
REV
-WRITE PROTECT
-WRITE FAULT
TRACK 00
INDEX
READ DATA COMPOSITE
-DOUBLE SIDED
+LINE SYNC
UNIT READY STATUS 1
UNIT READY STATUS 2
+WRITE FAULT
WRITE PROTECT
TRACK 0
INDEX PULSE
-RAW DATA
-DOUBLE SIDED
+LINE SYNC
+UNIT 1 READY
+UNIT 2 READY
+UNIT ADDR I/O
+FD READY
WRITE FAULT RESET
+WRITE DATA
+HEAD 1
+LOW WRITE CURRENT
+HEAD LOAD
+DIRECTION
+STEP
+WRITE DATE
-WRITE DATA
-HEAD SELECT 1
-LOW WRITE CURRENT
-HEAD LOAD
-DIRECTION
-STEP
-WRITE ENABLE
(PULL-UP A)
+DATA /DUB
+16.0 MHZ
NOT USED
LOC
CROSS REF NO 007

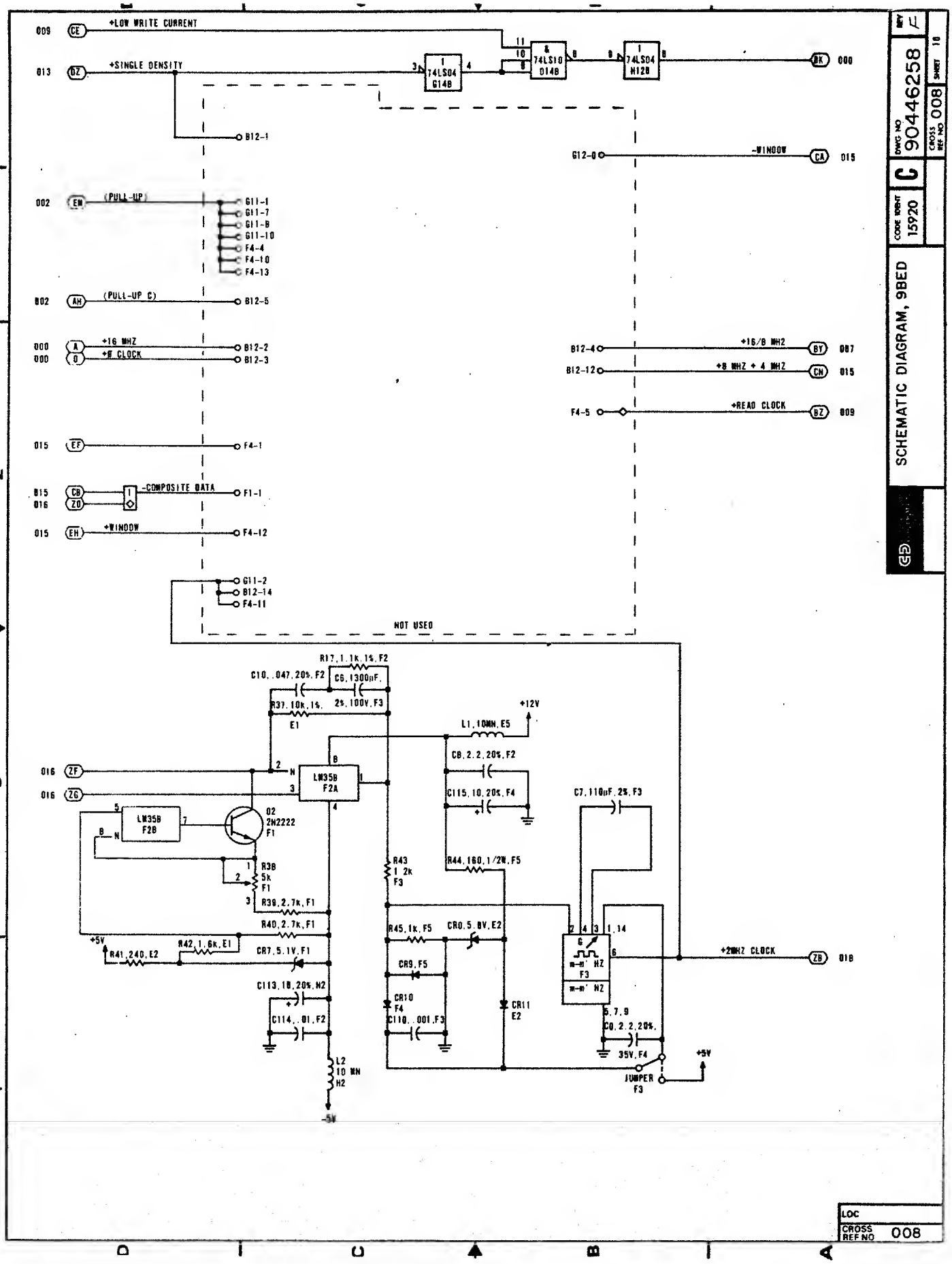
+LOW WRITE CURRENT
+SINGLE DENSITY
74LS04 G14B
74LS10 D14B
74LS04 H12B
-WINDOW
(PULL-UP)
(PULL-UP C)
+16 MHZ
+W CLOCK
+16/8 MHZ
+8 MHZ + 4 MHZ
+READ CLOCK
-COMPOSITE DATA
+WINDOW
NOT USED
LM358 F2A
LM358 F2B
Q2 2N2222 F1
+12V
+5V
-5V
+2MHZ CLOCK
JUMPER F3
SCHEMATIC DIAGRAM, 9BED
90446258
CODE IDENT 15920
CROSS REF NO 008
LOC

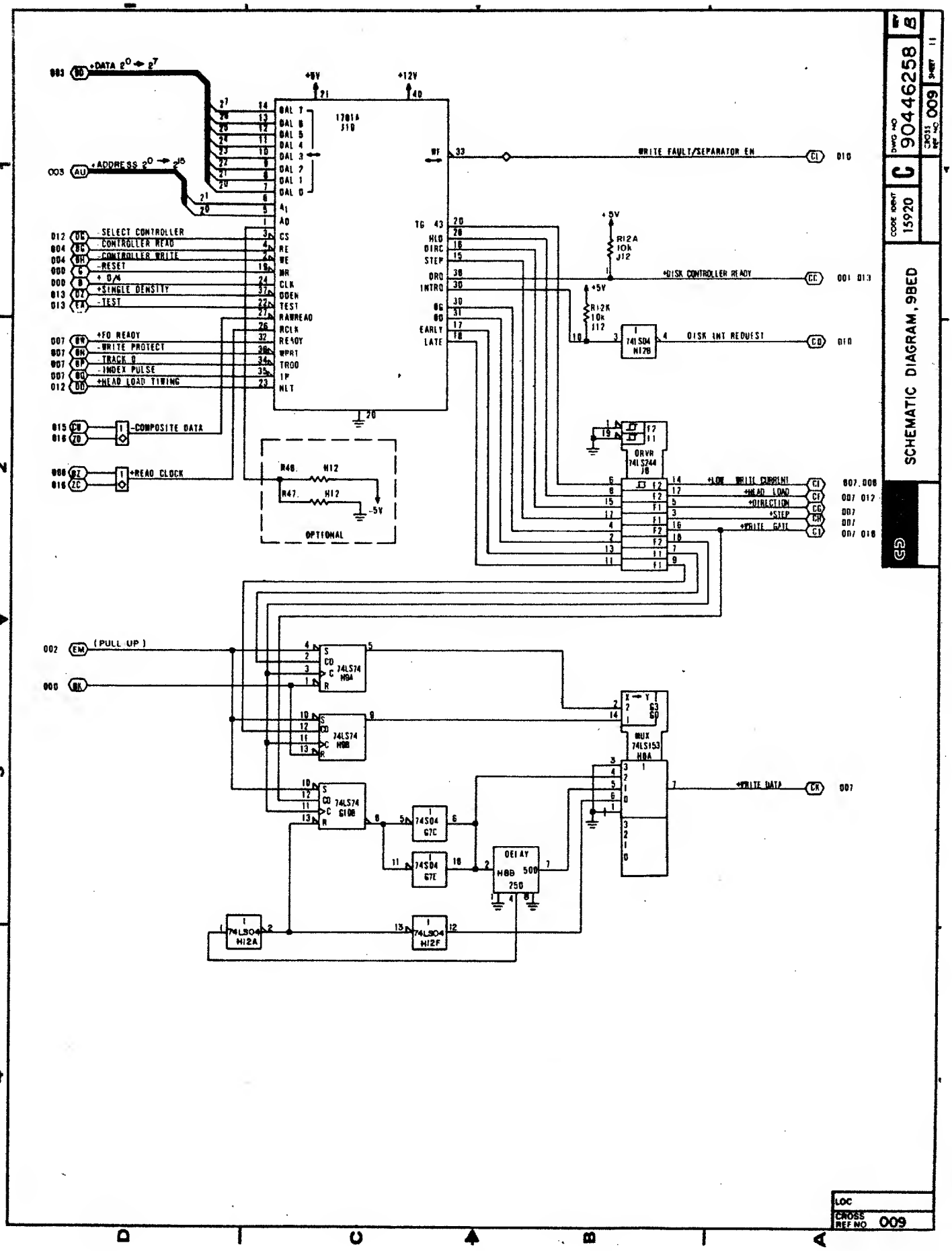
SCHEMATIC DIAGRAM, 9BED
DWG NO 90446258
CODE IDENT 15920
CROSS REF NO 009
+DATA 2^0 → 2^7
+ADDRESS 2^0 → 2^15
1781A J10
WRITE FAULT/SEPARATOR EN
-SELECT CONTROLLER
-CONTROLLER READ
-CONTROLLER WRITE
-RESET
+ D/M
+SINGLE DENSITY
-TEST
+FD READY
-WRITE PROTECT
-TRACK 0
-INDEX PULSE
+HEAD LOAD TIMING
-COMPOSITE DATA
+READ CLOCK
+DISK CONTROLLER READY
DISK INT REQUEST
OPTIONAL
DRVR 74LS244 J8
+LOW WRITE CURRENT
+HEAD LOAD
+DIRECTION
+STEP
+WRITE GATE
(PULL UP)
74LS74 H9A
74LS74 H9B
74LS74 G10B
MUX 74LS153 H8A
+WRITE DATA
DELAY H8B 500 250
74LS04 G7C
74LS04 G7E
74LS04 H12A
74LS04 H12F
LOC
CROSS REF NO 009

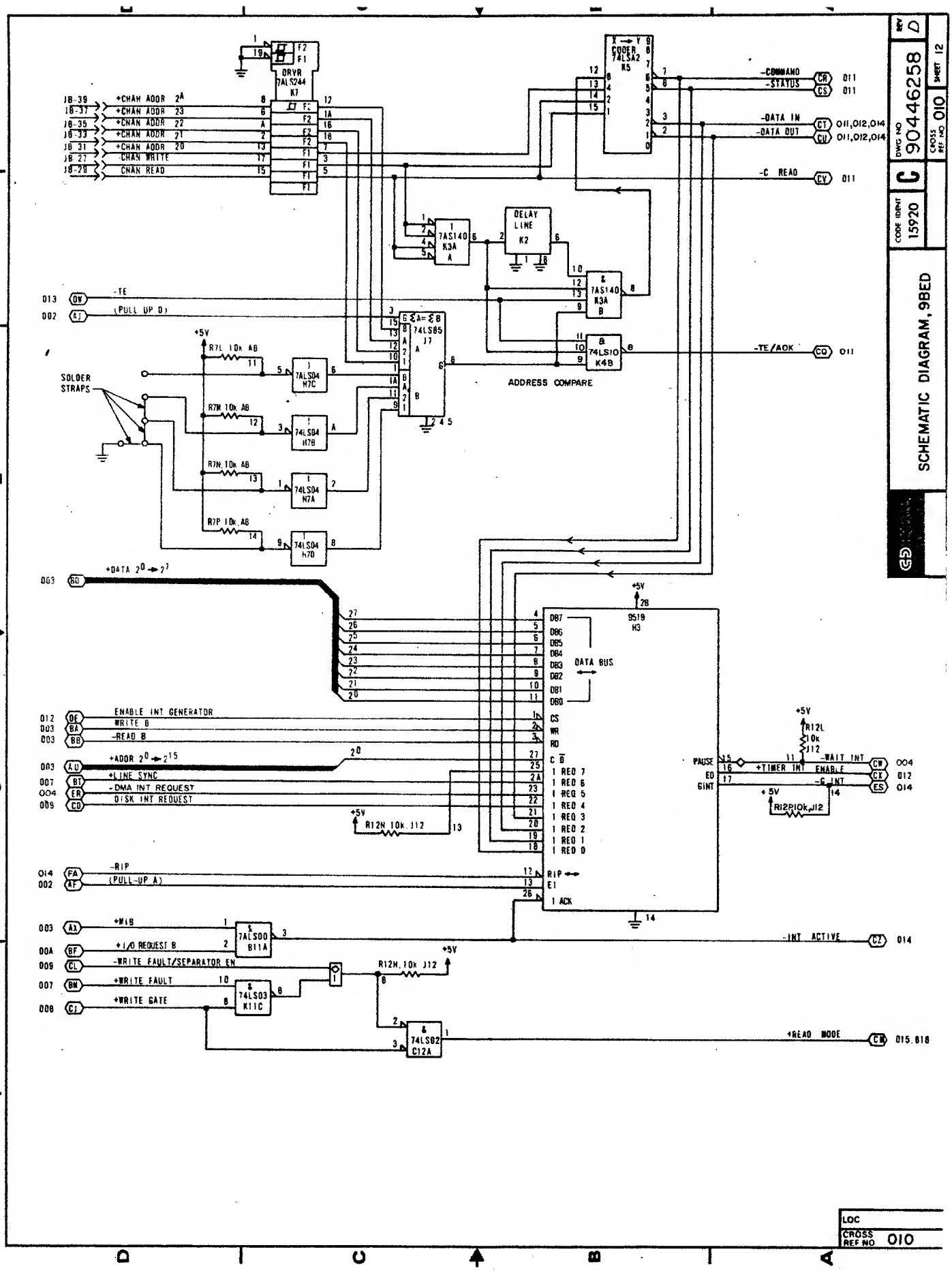
SCHEMATIC DIAGRAM, 9BED
DWG NO 90446258
CODE IDENT 15920
CROSS REF NO 010
SHEET 12
REV D
DRVR 74LS244 K7
CODER 74LS42 K5
DELAY LINE K2
74LS85 J7
74LS10 K4B
74LS04 H7C
74LS04 H7B
74LS04 N7A
74LS04 H7D
ADDRESS COMPARE
SOLDER STRAPS
9519 H3
DATA BUS
74LS00 B11A
74LS03 K11C
74LS02 C12A
-COMMAND
-STATUS
-DATA IN
-DATA OUT
-C READ
-TE/ACK
-TE
(PULL UP D)
+CHAN ADDR
+CHAN WRITE
CHAN READ
+DATA
ENABLE INT GENERATOR
WRITE B
-READ B
+ADDR
+LINE SYNC
-DMA INT REQUEST
DISK INT REQUEST
-RIP
(PULL-UP A)
+WIB
+I/O REQUEST B
-WRITE FAULT/SEPARATOR EN
+WRITE FAULT
+WRITE GATE
-WAIT INT
+TIMER INT
ENABLE
-C INT
-INT ACTIVE
+READ MODE
LOC
CROSS REF NO 010

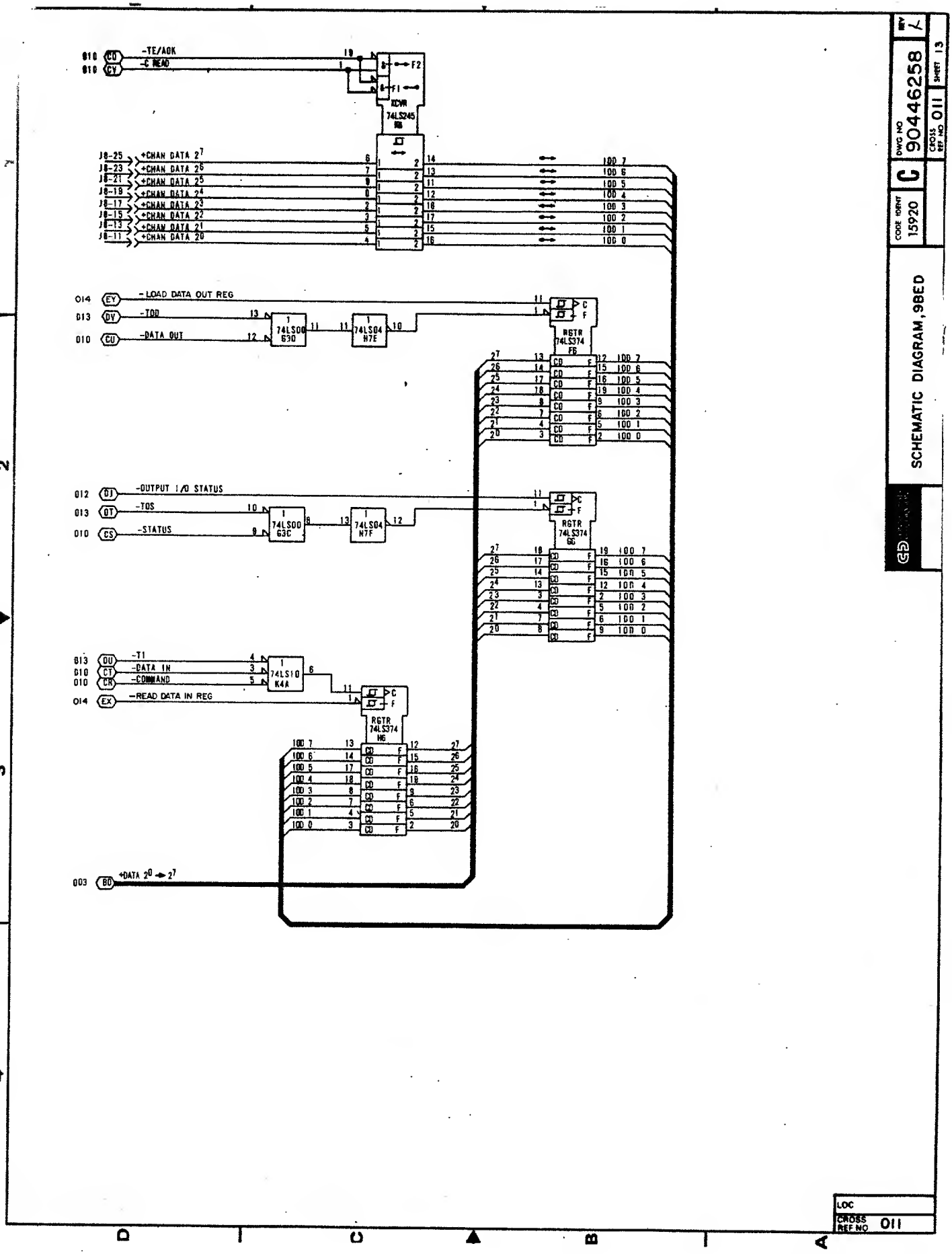
-TE/AOK
-C READ
XCVR
74LS245
F2
F1
J8-25 +CHAN DATA 2^7
J8-23 +CHAN DATA 2^6
J8-21 +CHAN DATA 2^5
J8-19 +CHAN DATA 2^4
J8-17 +CHAN DATA 2^3
J8-15 +CHAN DATA 2^2
J8-13 +CHAN DATA 2^1
J8-11 +CHAN DATA 2^0
100 7
100 6
100 5
100 4
100 3
100 2
100 1
100 0
-LOAD DATA OUT REG
-TOD
-DATA OUT
74LS00
G3D
74LS04
N7E
RGTR
74LS374
F6
-OUTPUT I/O STATUS
-TOS
-STATUS
74LS00
G3C
74LS04
N7F
RGTR
74LS374
G6
-T1
-DATA IN
-COMMAND
-READ DATA IN REG
74LS10
K4A
RGTR
74LS374
H6
+DATA 2^0 → 2^7
DWG NO 90446258
REV J
SHEET 13
CROSS REF NO 011
CODE IDENT 15920
C
SCHEMATIC DIAGRAM, 9BED
LOC
CROSS REF NO 011

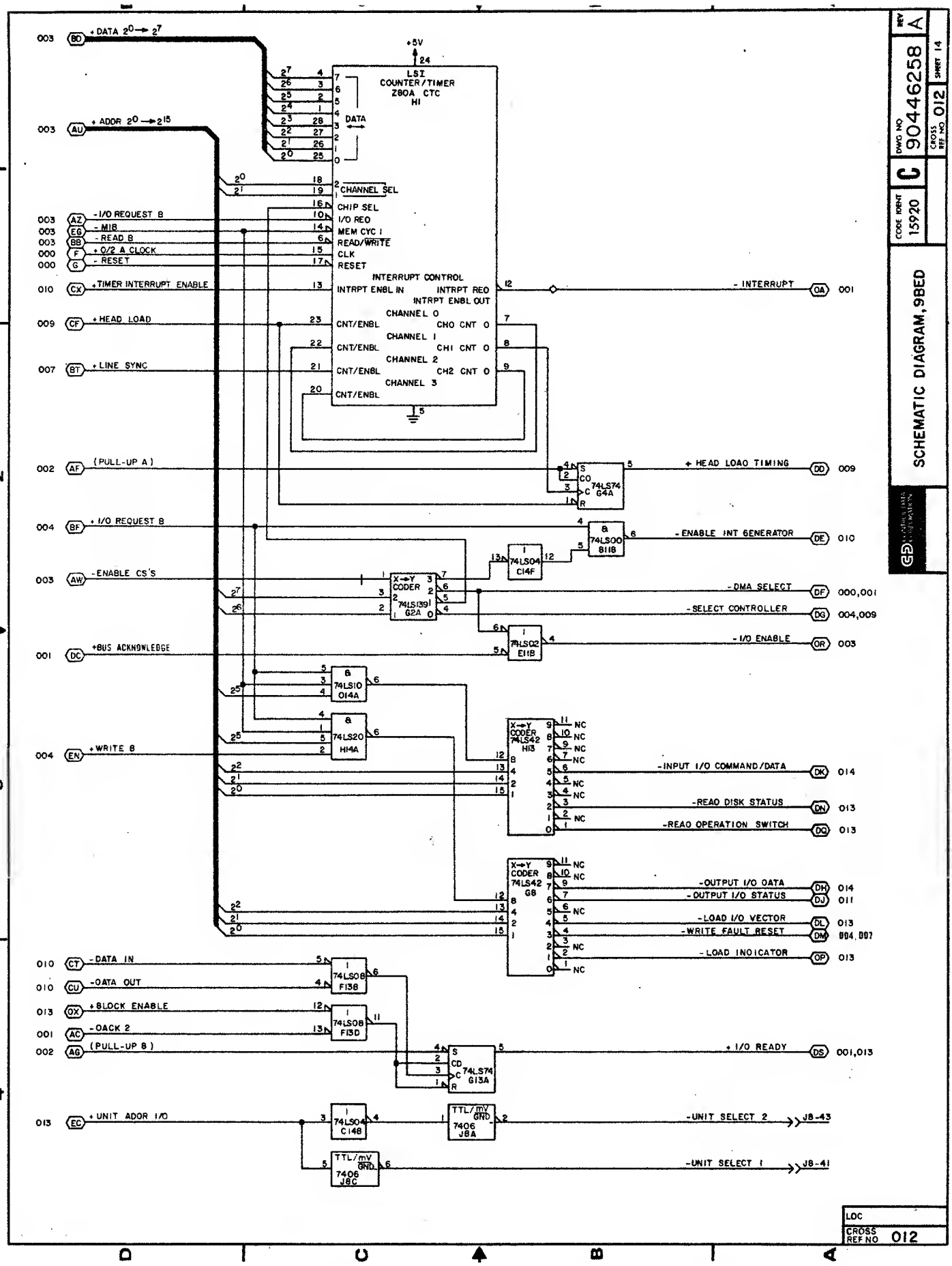
SCHEMATIC DIAGRAM, 9BED
CODE IDENT 15920
DWG NO 90446258
REV A
SHEET 14
CROSS REF NO 012
LSI COUNTER/TIMER Z80A CTC H1
+5V
DATA
CHANNEL SEL
CHIP SEL
I/O REQ
MEM CYC 1
READ/WRITE
CLK
RESET
INTERRUPT CONTROL
INTRPT ENBL IN
INTRPT REQ
INTRPT ENBL OUT
CHANNEL 0
CNT/ENBL
CH0 CNT 0
CHANNEL 1
CH1 CNT 0
CHANNEL 2
CH2 CNT 0
CHANNEL 3
+DATA 2^0 → 2^7
+ADDR 2^0 → 2^15
-I/O REQUEST B
-MI8
-READ B
+0/2 A CLOCK
-RESET
+TIMER INTERRUPT ENABLE
+HEAD LOAD
+LINE SYNC
(PULL-UP A)
+I/O REQUEST B
-ENABLE CS'S
+BUS ACKNOWLEDGE
+WRITE B
-DATA IN
-DATA OUT
+BLOCK ENABLE
-DACK 2
(PULL-UP B)
+UNIT ADDR I/O
-INTERRUPT
+HEAD LOAD TIMING
-ENABLE INT GENERATOR
-DMA SELECT
-SELECT CONTROLLER
-I/O ENABLE
-INPUT I/O COMMAND/DATA
-READ DISK STATUS
-READ OPERATION SWITCH
-OUTPUT I/O DATA
-OUTPUT I/O STATUS
-LOAD I/O VECTOR
-WRITE FAULT RESET
-LOAD INDICATOR
+I/O READY
-UNIT SELECT 2
-UNIT SELECT 1
74LS74 G4A
74LS00 B11B
74LS04 C14F
74LS139 G2A
74LS02 E11B
74LS10 D14A
74LS20 H14A
74LS42 H13
74LS42 G8
74LS08 F13B
74LS08 F13D
74LS74 G13A
74LS04 C14B
7406 J8A
7406 J8C
LOC
CROSS REF NO 012

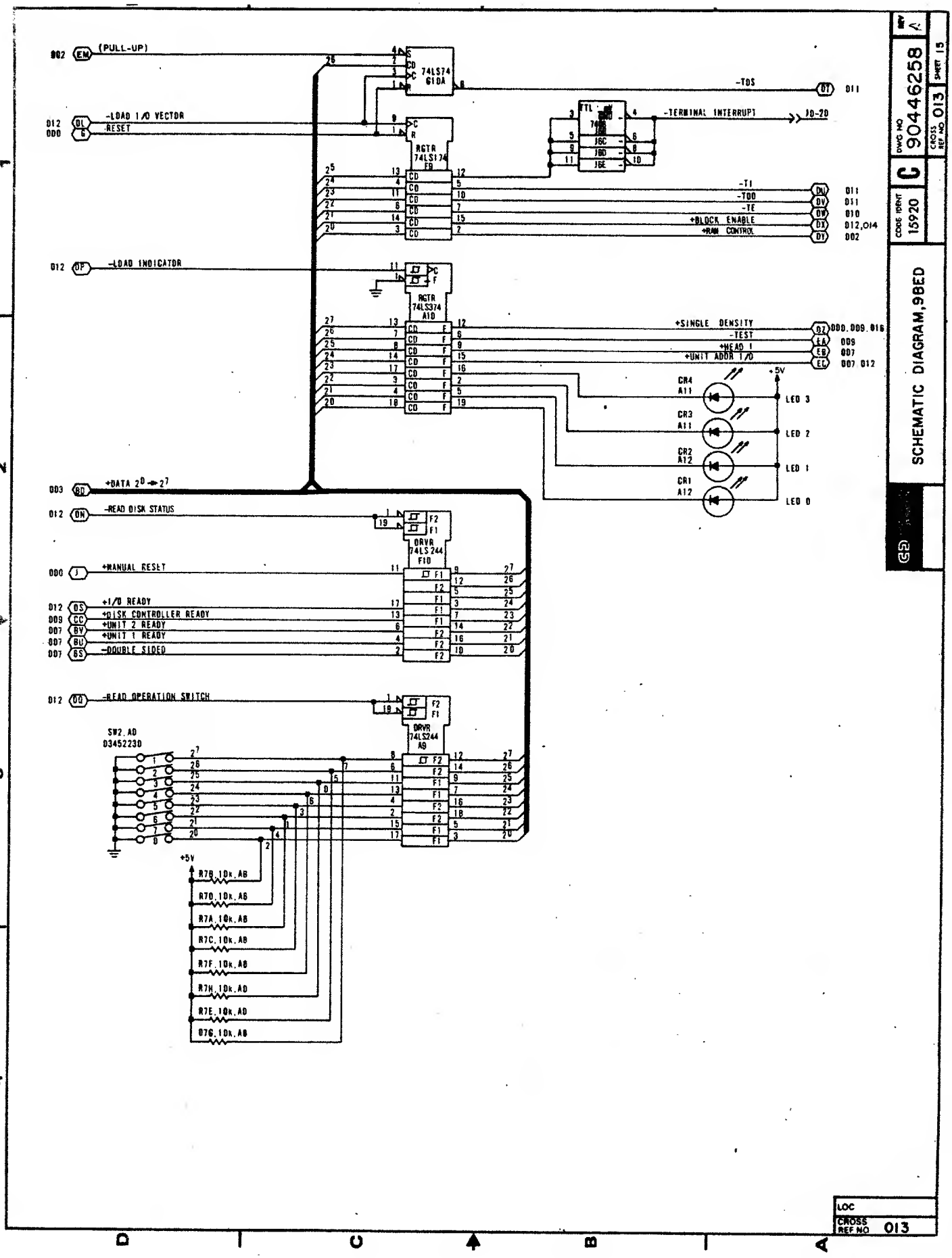
SCHEMATIC DIAGRAM,98ED
DWG NO 90446258
CROSS REF NO 013
SHEET 15
REV A
CODE IDENT 15920
C
(PULL-UP)
-LOAD I/O VECTOR
-RESET
-LOAD INDICATOR
+DATA 2^0 → 2^7
-READ DISK STATUS
+MANUAL RESET
+I/O READY
+DISK CONTROLLER READY
+UNIT 2 READY
+UNIT 1 READY
-DOUBLE SIDED
-READ OPERATION SWITCH
74LS74 G10A
RGTR 74LS174 F8
RGTR 74LS374 A10
DRVR 74LS244 F10
DRVR 74LS244 A9
SW2,A0 D3452230
-TDS
-TERMINAL INTERRUPT
-TI
-TDO
-TE
+BLOCK ENABLE
+RAM CONTROL
+SINGLE DENSITY
-TEST
+HEAD 1
+UNIT ADDR I/O
CR4 A11
CR3 A11
CR2 A12
CR1 A12
LED 3
LED 2
LED 1
LED 0
+5V
R7B,10k,A8
R7D,10k,A8
R7A,10k,A8
R7C,10k,A8
R7F,10k,A8
R7H,10k,A0
R7E,10k,A0
R7G,10k,A8
LOC
CROSS REF NO 013

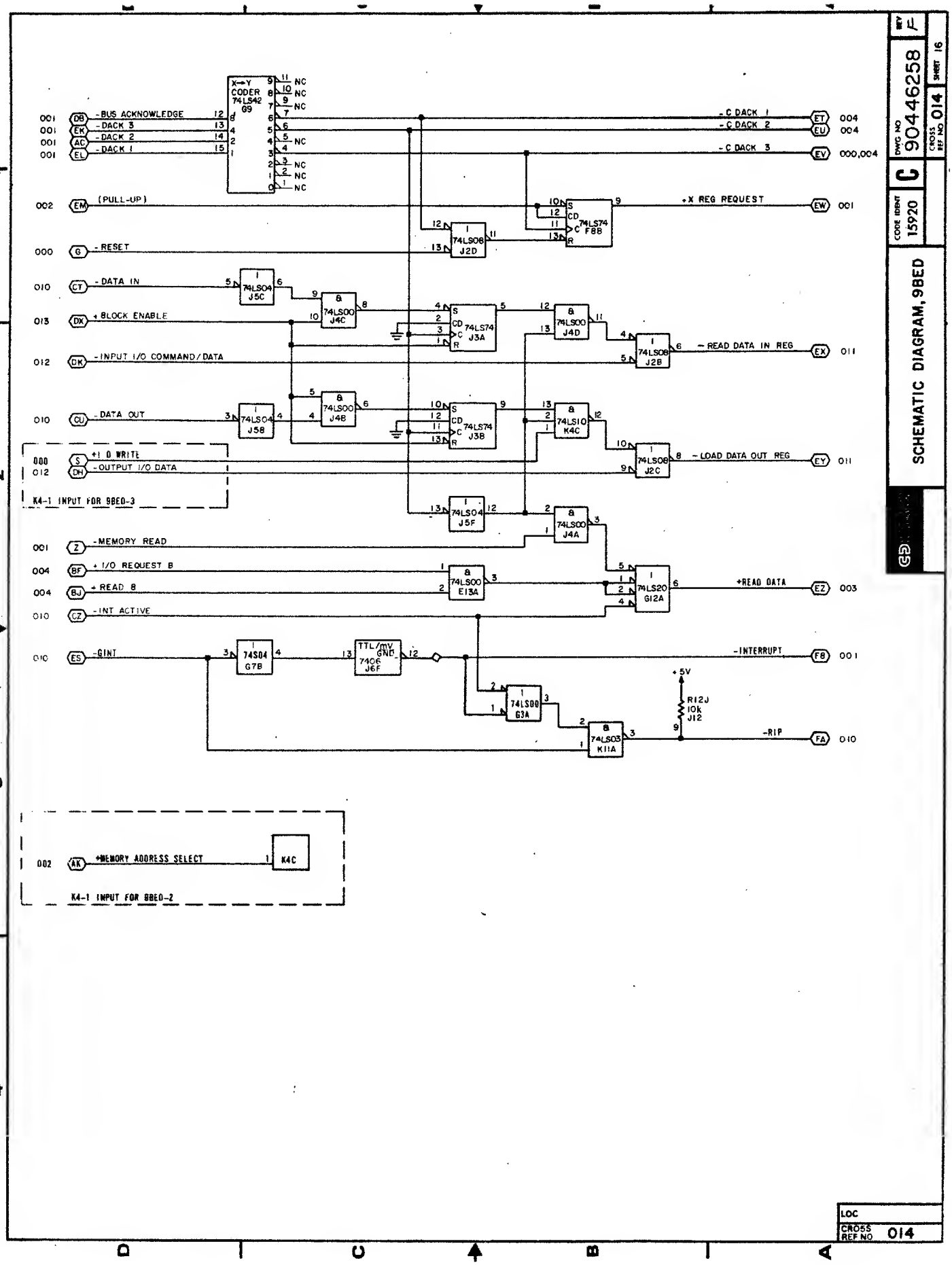
SCHEMATIC DIAGRAM, 9BED
DWG NO 90446258
REV F
SHEET 16
CROSS REF NO 014
CODE IDENT 15920
C
X→Y CODER 74LS42 G9
001 DB -BUS ACKNOWLEDGE
001 EK -DACK 3
001 AC -DACK 2
001 EL -DACK 1
002 EM (PULL-UP)
000 G -RESET
010 CT -DATA IN
013 DX +BLOCK ENABLE
012 DK -INPUT I/O COMMAND/DATA
010 CU -DATA OUT
000 S +I O WRITE
012 DH -OUTPUT I/O DATA
K4-1 INPUT FOR 9BED-3
001 Z -MEMORY READ
004 BF +I/O REQUEST B
004 BJ +READ B
010 CZ -INT ACTIVE
010 ES -GINT
002 AK +MEMORY ADDRESS SELECT
K4C
K4-1 INPUT FOR 9BED-2
-C DACK 1 ET 004
-C DACK 2 EU 004
-C DACK 3 EV 000,004
+X REG REQUEST EW 001
-READ DATA IN REG EX 011
-LOAD DATA OUT REG EY 011
+READ DATA EZ 003
-INTERRUPT FB 001
-RIP FA 010
+5V
R12J 10k J12
J5C J4C J3A J4D J2B J5B J4B J3B K4C J2C J5F J4A E13A G12A G7B J6F G3A K11A J2D F8B
LOC
CROSS REF NO 014

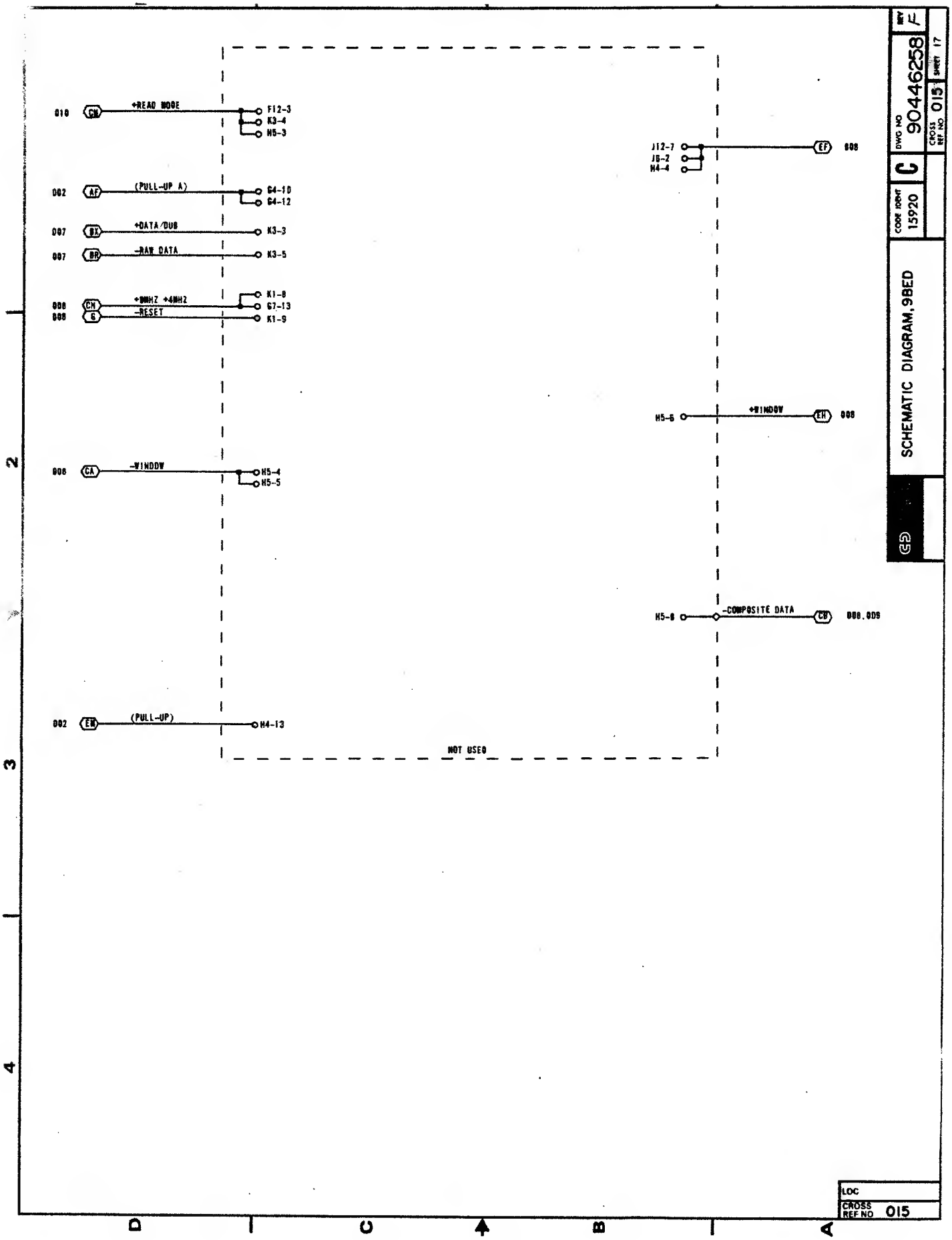
010 CN +READ MODE
F12-3
K3-4
H5-3
002 AF (PULL-UP A)
G4-10
G4-12
007 BX +DATA/DUB
K3-3
007 BR -RAW DATA
K3-5
008 CN +8MHZ +4MHZ
K1-8
G7-13
008 G -RESET
K1-9
008 CA -WINDOW
H5-4
H5-5
002 EN (PULL-UP)
H4-13
NOT USED
J12-7
J8-2
H4-4
EF 008
H5-6
+WINDOW
EH 008
H5-8
-COMPOSITE DATA
CH 008,009
REV F
DWG NO 90446258
SHEET 17
CROSS REF NO 015
CODE IDENT 15920
C
SCHEMATIC DIAGRAM,9BED
GE
LOC
CROSS REF NO 015
D
C
B
A
2
3
4

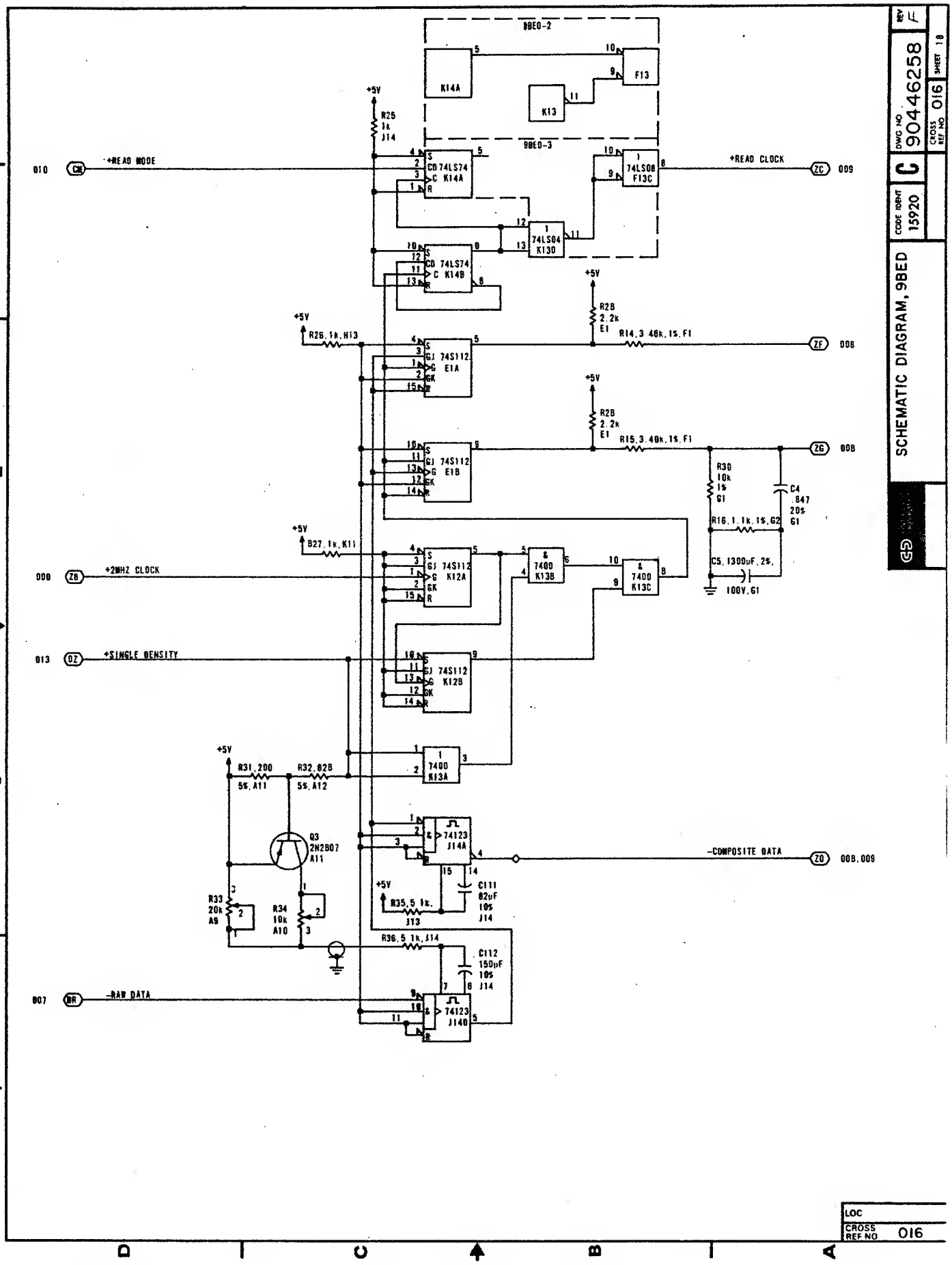
SCHEMATIC DIAGRAM, 9BED
DWG NO 90446258
CODE IDENT 15920
C
REV F
SHEET 1 8
CROSS REF NO 016
LOC
CROSS REF NO 016
9BED-2
9BED-3
K14A
K13
F13
+5V
R25 1k J14
+READ MODE
010
CK
CD 74LS74 C K14A
74LS08 F13C
+READ CLOCK
ZC
009
74LS04 K13D
CD 74LS74 C K14B
R26, 1k, H13
R28 2.2k E1
R14, 3.46k, 1%, F1
74S112 E1A
ZF
008
R15, 3.40k, 1%, F1
74S112 E1B
ZG
R30 10k 1% G1
C4 .047 20% G1
R16, 1.1k, 1%, G2
C5, 1300pF, 2%, 100V, G1
R27, 1k, K11
+2MHZ CLOCK
000
ZB
74S112 K12A
7400 K13B
7400 K13C
+SINGLE DENSITY
013
OZ
74S112 K12B
7400 K13A
R31, 200 5%, A11
R32, 82B 5%, A12
Q3 2N2807 A11
74123 J14A
-COMPOSITE DATA
ZO
008, 009
C111 82pF 10% J14
R33 20k A9
R34 10k A10
R35, 5.1k. J13
R36, 5.1k, J14
C112 150pF 10% J14
-RAW DATA
007
BR
74123 J14B

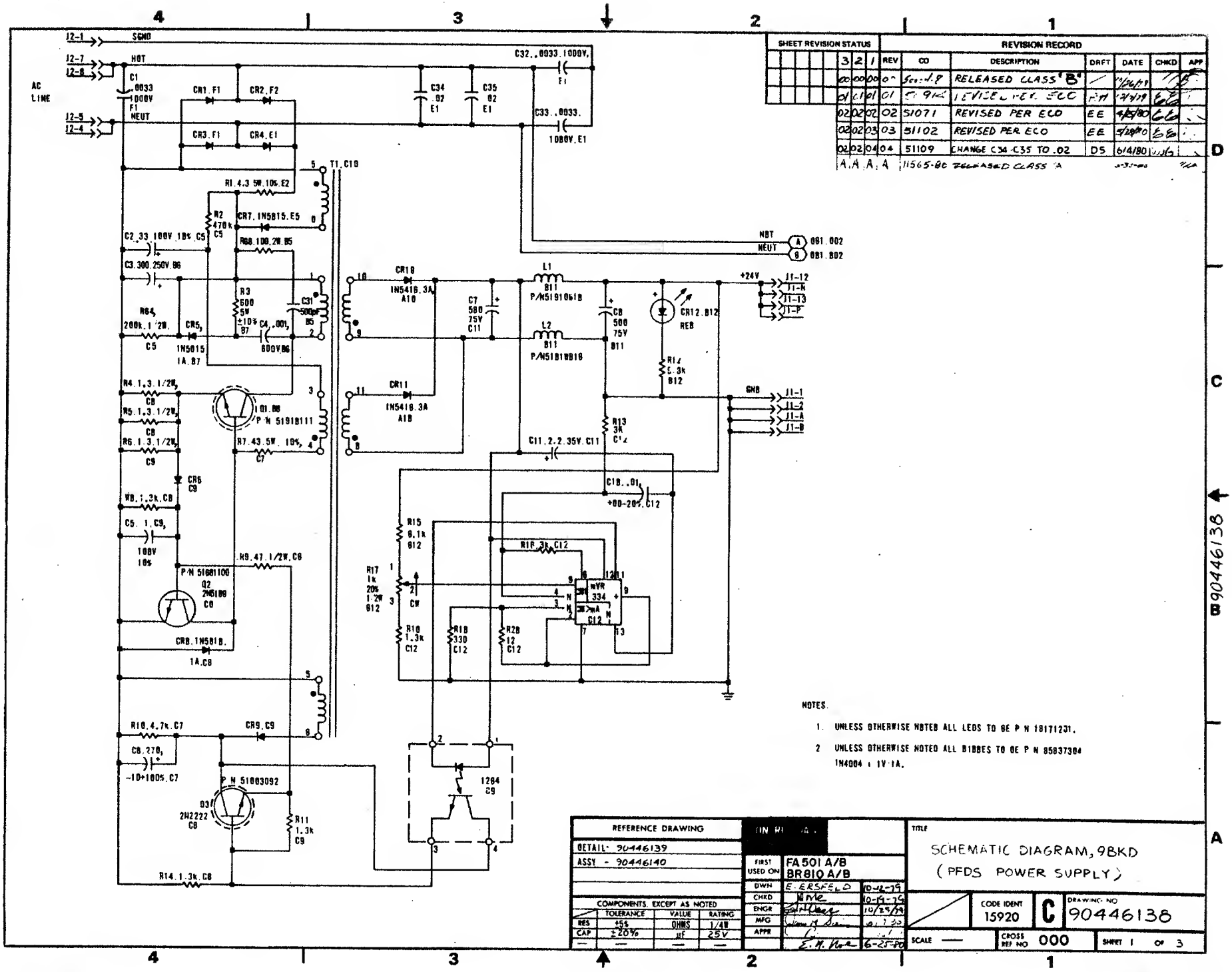

SHEET REVISION STATUS			REVISION RECORD						
3	2	1	REV	CO	DESCRIPTION	DRFT	DATE	CHKD	APP
00	00	00	00	[illegible]	RELEASED CLASS "B"		[illegible]		
01	01	01	01	[illegible]	REVISED PER ECO	[illegible]	[illegible]	[illegible]	
02	02	02	02	51071	REVISED PER ECO	EE	4/25/80	[illegible]	
02	02	03	03	51102	REVISED PER ECO	EE	5/28/80	[illegible]	
02	02	04	04	51109	CHANGE C34-C35 TO .02	DS	6/4/80	[illegible]	
A	A	A	A	11565-BC	RELEASED CLASS "A"		[illegible]		

NOTES.

1. UNLESS OTHERWISE NOTED ALL LEDS TO BE P N 18171231.
2. UNLESS OTHERWISE NOTED ALL DIODES TO BE P N 85837304 1N4004 1 1V 1A.

REFERENCE DRAWING	
DETAIL - 90446139	
ASSY - 90446140	

COMPONENTS EXCEPT AS NOTED			
	TOLERANCE	VALUE	RATING
RES	±5%	OHMS	1/4W
CAP	±20%	µf	25V
—	—	—	—

FIRST USED ON	FA501 A/B BR810 A/B	
DWN	E. ERSFELD	10-12-79
CHKD	[illegible]	10-19-79
ENGR	[illegible]	10/25/79
MFG	[illegible]	[illegible]
APPR	E. M. [illegible]	6-25-80

TITLE

SCHEMATIC DIAGRAM, 9BKD
(PFDS POWER SUPPLY)

CODE IDENT		DRAWING NO
15920	C	90446138

SCALE — CROSS REF NO 000 SHEET 1 OF 3

90446138

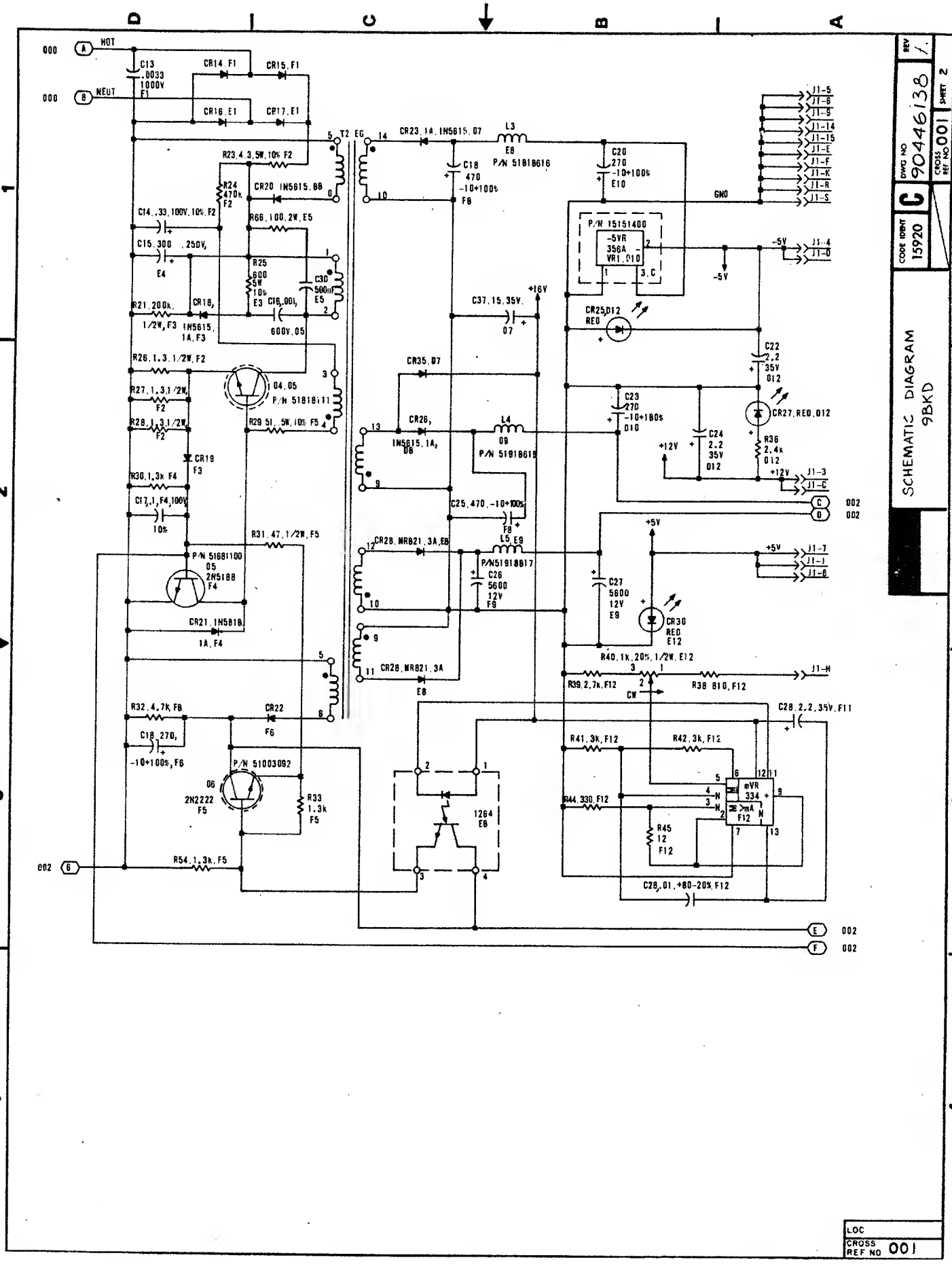
SCHEMATIC DIAGRAM
9BKD
CODE IDENT 15920
C
DWG NO 90446138
REV 1
SHEET 2
CROSS REF NO 001
LOC
CROSS REF NO 001
HOT
NEUT
GND
T2
L3
L4
L5
C13 .0033 1000V F1
CR14, F1
CR15, F1
CR16, E1
CR17, E1
R23, 4.3, 5W, 10% F2
R24 470k F2
CR20 1N5615, B8
C14, .33, 100V, 10% F2
R66, 100, 2W, E5
C15, 300, 250V, E4
R25 600 5W 10% E3
C30 500pF E5
R21, 200k, 1/2W, F3
CR18, 1N5615, 1A, F3
C16, .001, 600V, D5
R26, 1.3, 1/2W, F2
R27, 1.3, 1/2W, F2
R28, 1.3, 1/2W, F2
Q4, Q5
P/N 51818111
R29 51, 5W, 10% F5
CR19 F3
R30, 1.3k F4
C17, .1, F4, 100V, 10%
R31, 47, 1/2W, F5
P/N 51681100
Q5 2N5188 F4
CR21, 1N5818, 1A, F4
R32, 4.7k, F6
CR22 F6
C18, 270, -10+100%, F6
P/N 51003092
Q6 2N2222 F5
R33 1.3k F5
R54, 1.3k, F5
CR23, 1A, 1N5615, D7
C18 470 -10+100% F8
L3 E8 P/N 51818616
C20 270 -10+100% E10
P/N 15151400
-5VR 356A VR1, D10
C37, 15, 35V, D7
+16V
CR25, D12 RED
C22 2.2 35V D12
CR35, D7
C23 270 -10+180% D10
CR26, 1N5615, 1A, D8
L4 D9 P/N 51818615
C24 2.2 35V D12
CR27, RED, D12
R36 2.4k D12
C25, 470, -10+100% F8
CR28, MR821, 3A, E8
L5, E9 P/N 51818817
C26 5600 12V F9
C27 5600 12V E9
CR30 RED E12
R40, 1k, 20%, 1/2W, E12
R39, 2.7k, F12
R38 810, F12
CW
C28, 2.2, 35V, F11
R41, 3k, F12
R42, 3k, F12
R44, 330, F12
R45 12 F12
mVR 334 F12
1264 E8
C28, .01, +80-20% F12
J1-5
J1-6
J1-9
J1-14
J1-15
J1-E
J1-F
J1-K
J1-R
J1-S
J1-4
J1-D
J1-3
J1-C
J1-7
J1-J
J1-8
J1-H
+12V
+5V
-5V
002

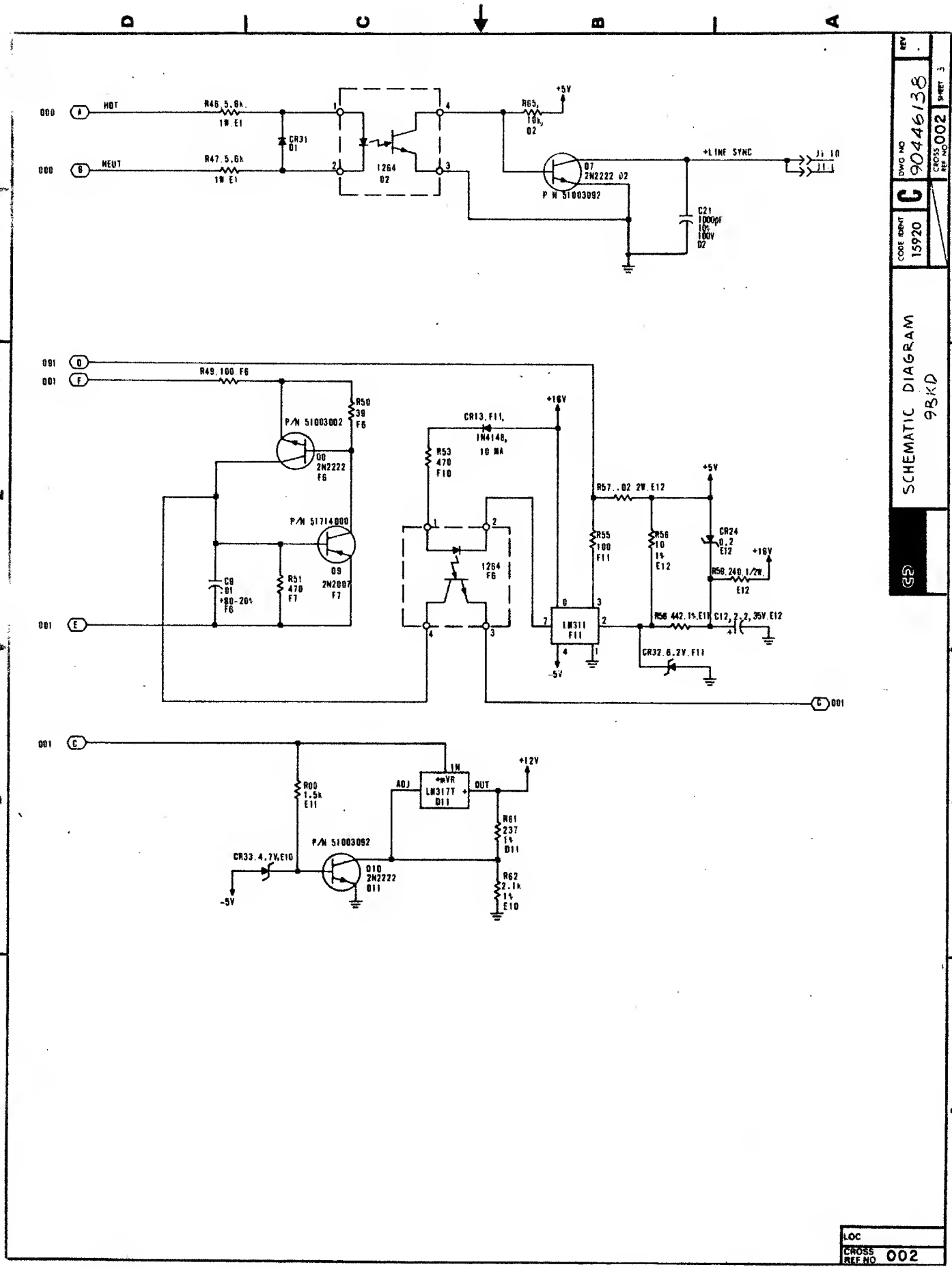
HOT
NEUT
R46, 5.6k, 1W, E1
R47, 5.6k, 1W, E1
CR31 D1
1264 D2
R65, 10k, D2
+5V
Q7 2N2222 D2
P/N 51003092
+LINE SYNC
J1 10
J1 1
C21 10000pF 10% 100V D2
R49, 100 F6
R50 39 F6
P/N 51003002
Q8 2N2222 F6
P/N 51714000
Q9 2N2007 F7
C9 .01 +80-20% F6
R51 470 F7
CR13, F11, 1N4148, 10 MA
R53 470 F10
1264 F6
+16V
R57, .02 2W, E12
R55 100 F11
R56 10 1% E12
CR24 0.2 E12
R58, 240, 1/2W, E12
LM311 F11
R56 442, 1%, E11
C12, 2.2, 35V, E12
CR32, 6.2V, F11
-5V
R00 1.5k E11
CR33, 4.7V, E10
P/N 51003092
Q10 2N2222 D11
LM317T D11
ADJ
OUT
+12V
R61 237 1% D11
R62 2.1k 1% E10
SCHEMATIC DIAGRAM 9BKD
DWG NO 90446138
CODE IDENT 15920
CROSS REF NO 002
SHEET 3
REV
LOC
CROSS REF NO 002

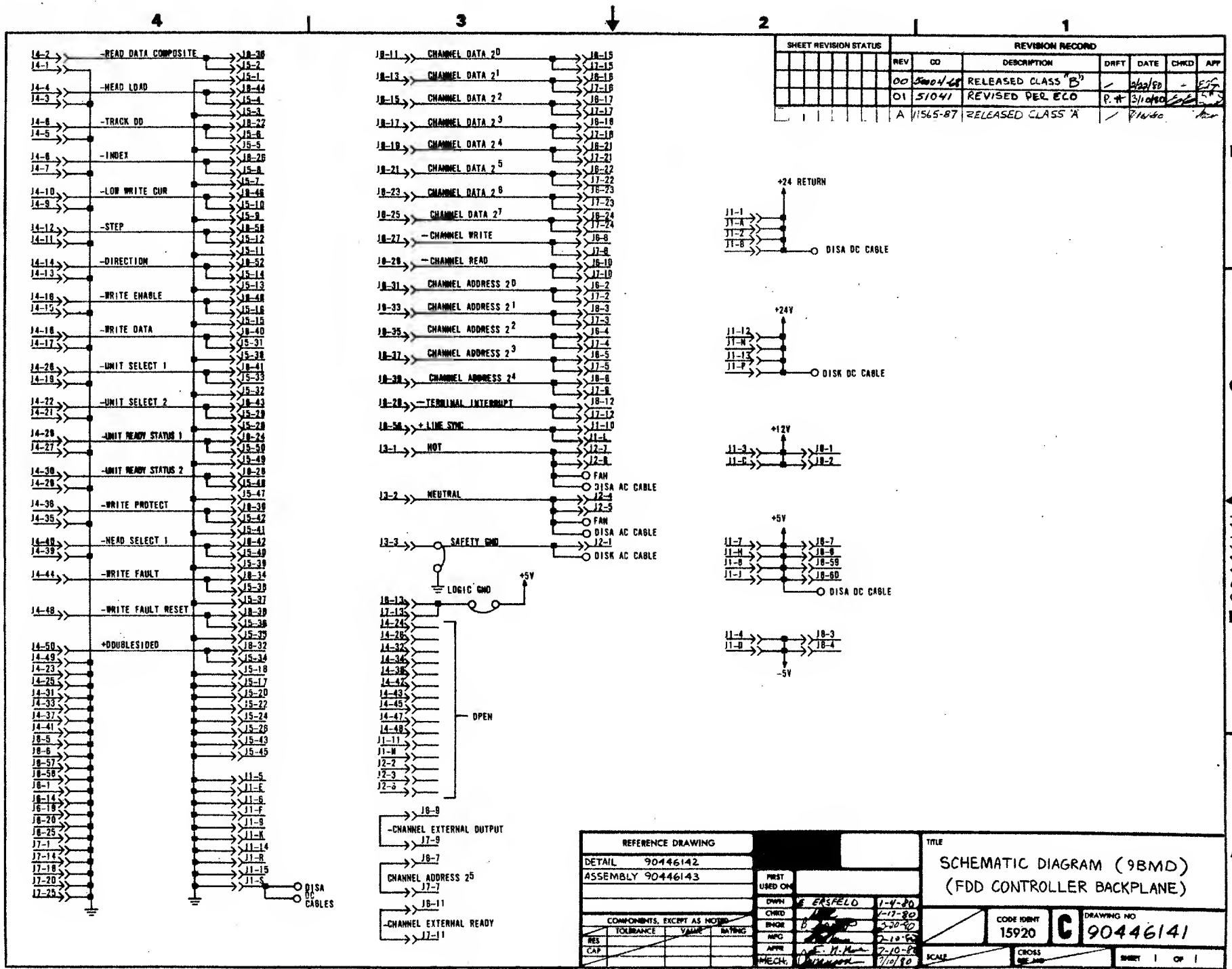

SHEET REVISION STATUS	REVISION RECORD					
REV	CO	DESCRIPTION	DRFT	DATE	CHKD	APP
00	50004-68	RELEASED CLASS "B"	—	9/22/80	—	
01	51041	REVISED PER ECO	P.H	3/10/80		
A	11565-87	RELEASED CLASS "A"	—	7/16/80		

REFERENCE DRAWING	
DETAIL	90446142
ASSEMBLY	90446143

COMPONENTS, EXCEPT AS NOTED	TOLERANCE	VALUE	RATING
RES			
CAP			

FIRST USED ON		
DWN	E. ERSFELD	1-4-80
CHKD		1-17-80
ENGR		3-20-80
MFG		2-10-80
APPR		7-10-80
MECH		7/10/80

TITLE

SCHEMATIC DIAGRAM (9BMD)
(FDD CONTROLLER BACKPLANE)

CODE IDENT 15920 | C | DRAWING NO 90446141

SCALE | CROSS REF | SHEET 1 OF 1

90446141

62949100

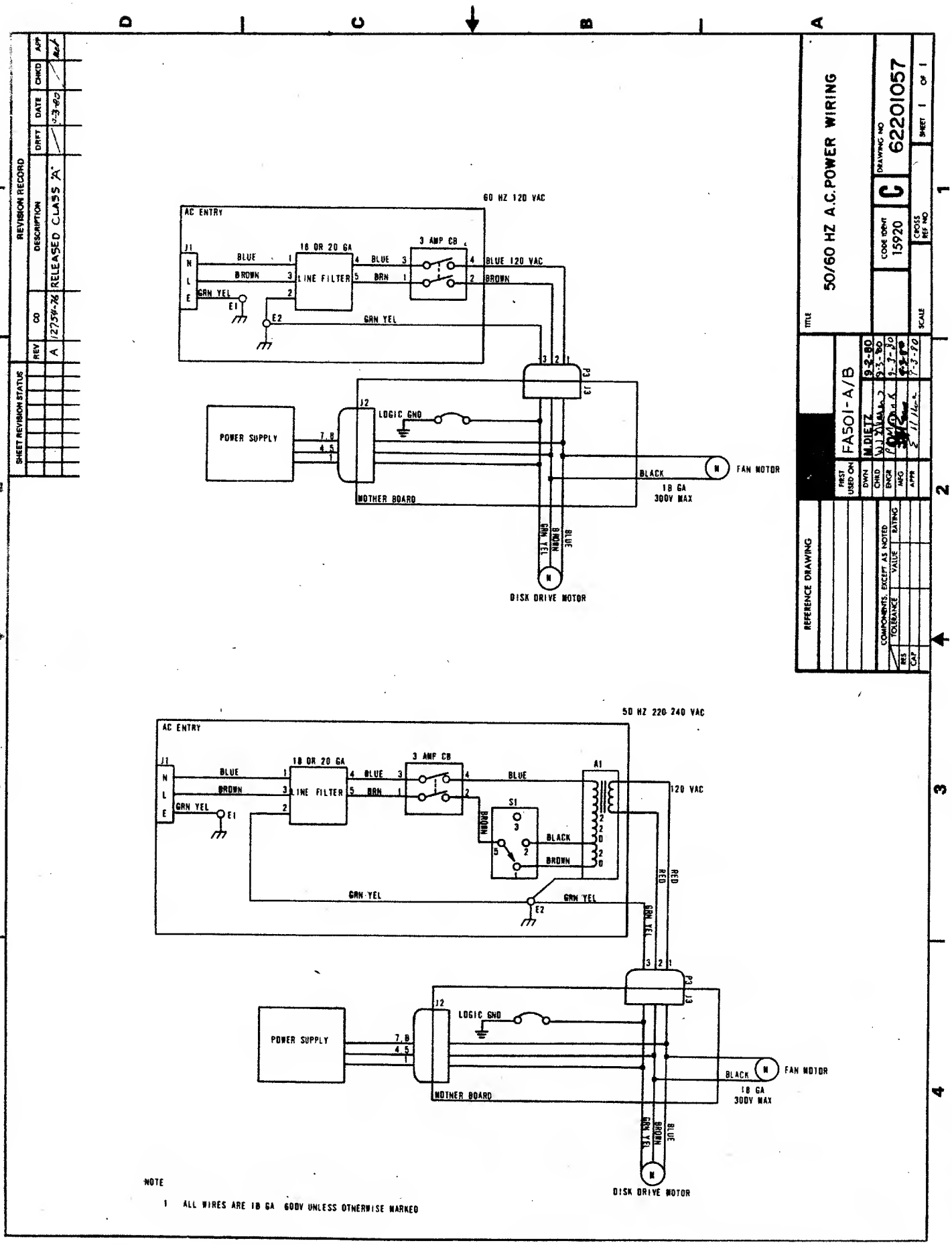
REVISION RECORD
REV
CO
DESCRIPTION
DRFT
DATE
CHKD
APP
A
12754-76
RELEASED CLASS 'A'
SHEET REVISION STATUS
60 HZ 120 VAC
AC ENTRY
J1
N
L
E
BLUE
BROWN
GRN YEL
E1
E2
16 OR 20 GA
LINE FILTER
3 AMP CB
BLUE 120 VAC
P3
J3
POWER SUPPLY
J2
LOGIC GND
MOTHER BOARD
BLACK
FAN MOTOR
18 GA
300V MAX
DISK DRIVE MOTOR
50 HZ 220-240 VAC
18 OR 20 GA
A1
S1
120 VAC
RED
NOTE
1 ALL WIRES ARE 18 GA 600V UNLESS OTHERWISE MARKED
TITLE
50/60 HZ A.C. POWER WIRING
CODE IDENT
15920
DRAWING NO
C
62201057
SHEET 1 OF 1
SCALE
CROSS REF NO
FA501-A/B
FIRST USED ON
DWN
CHKD
ENGR
MFG
APP
M.DIETZ
9-2-80
REFERENCE DRAWING
COMPONENTS, EXCEPT AS NOTED
VALUE
RATING
TOLERANCE
RES
CAP

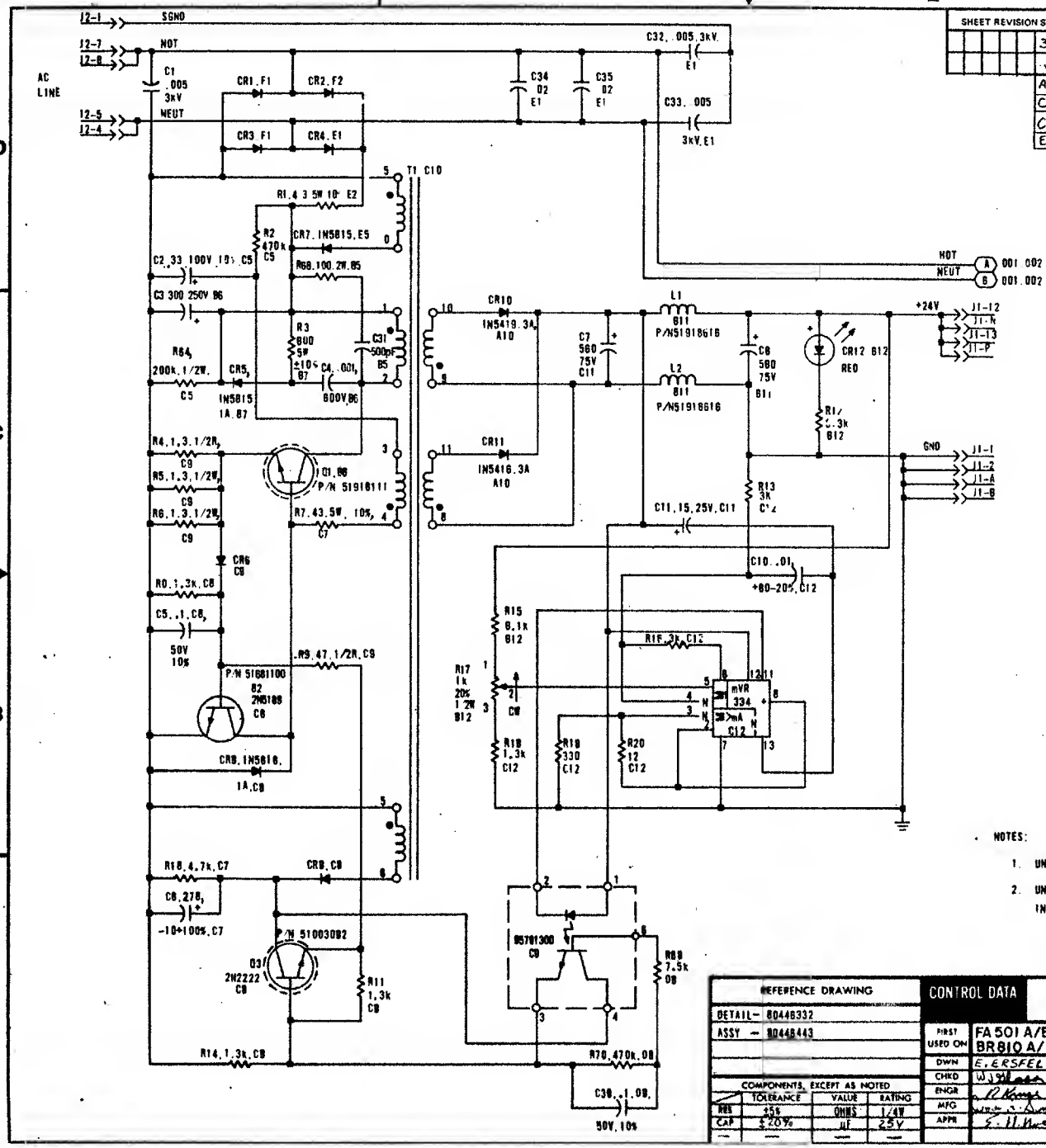

SHEET REVISION STATUS			REVISION RECORD						
3	2	1	REV	CO	DESCRIPTION	DRFT	DATE	CHKD	APP
					RELEASED CLASS A				
A	B	B	B	14722	REVISED PER ECO	EE	2/10/81	EE	DCD
C	B	C	C	14774	C12 WAS 15,25V	WJG	8-28-81	WJG	RK
C	D	D	D	14985	CHG VALUE OF C28	EE	1/28/82	EE	2/18
E	D	E	E	16060	CHG R62 VALUE, DET & ASSY NO	WJG	8-10-83	WJG	2/18

NOTES:

1. UNLESS OTHERWISE NOTED ALL LEDS TO BE P/N 19171231.
2. UNLESS OTHERWISE NOTED ALL DIODES TO BE P/N 85037384 1N4004 1.1V/1A.

REFERENCE DRAWING	
DETAIL – 80448332	
ASSY – 80448443	

COMPONENTS, EXCEPT AS NOTED			
	TOLERANCE	VALUE	RATING
RES	±5%	OHMS	1/4W
CAP	±20%	µF	25V

CONTROL DATA		
FIRST USED ON	FA501 A/B BR810 A/B	
DWN	E. ERSFELD	3/24/81
CHKD	W. JOHNSON	4/10/81
ENGR	R. Kruger	4/10
MFG	[illegible]	4/10/81
APPR	[illegible]	4/10/81

TITLE

SCHEMATIC DIAGRAM, IAFD (PFDS POWER SUPPLY)

CODE IDENT		DRAWING NO
15920	C	90446288

SCALE —— CROSS REF NO 000 SHEET 1 OF 3

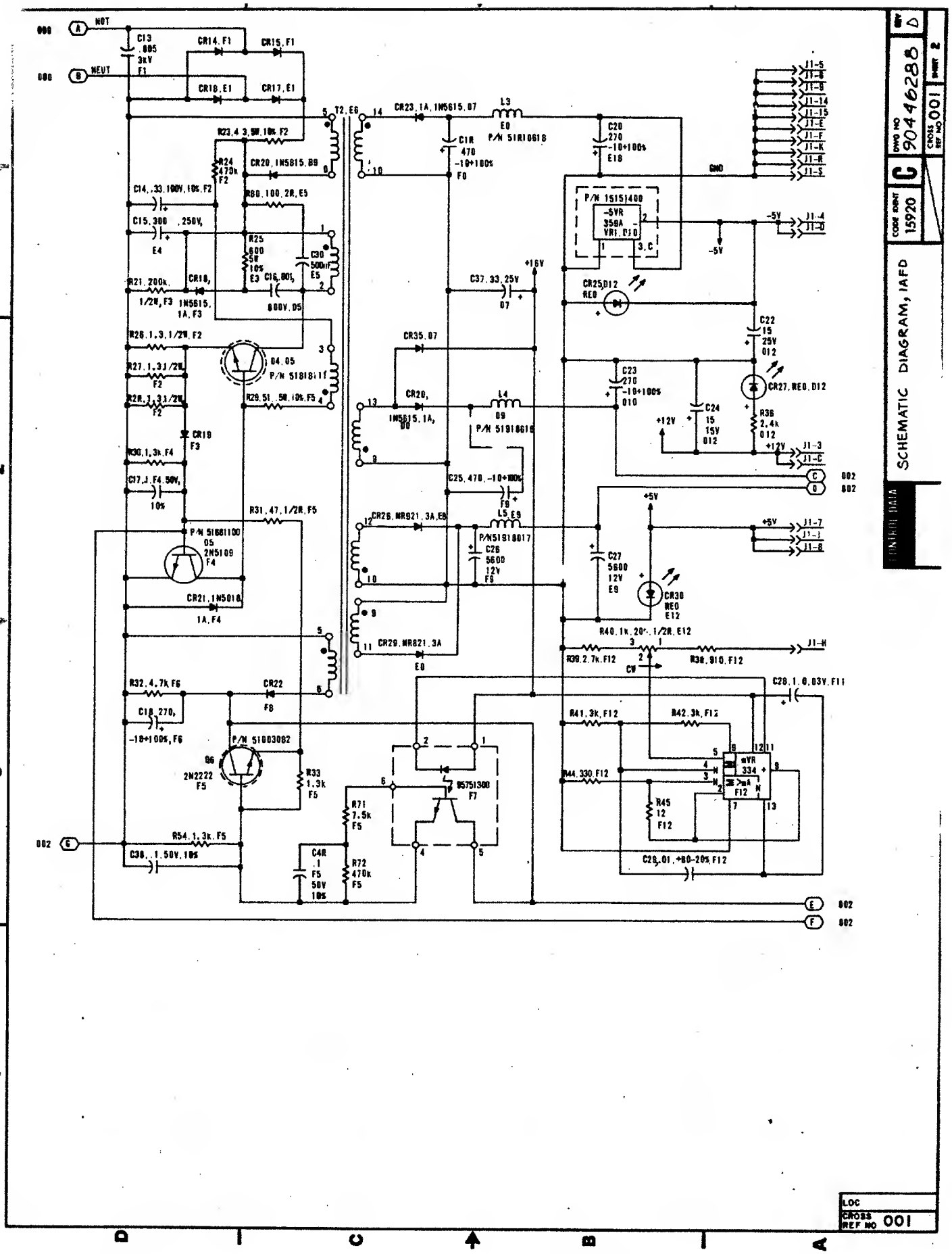
SCHEMATIC DIAGRAM, IAFD
CODE IDENT 15920
DWG NO 9046288
REV D
CROSS REF NO 001
SHEET 2
LOC
CROSS REF NO 001
HOT
NEUT
C13 .005 3kV F1
CR14, F1
CR15, F1
CR18, E1
CR17, E1
T2, E6
CR23, 1A, 1N5615, D7
L3 E0 P/N 51810618
C1R 470 -10+100% F0
C20 270 -10+100% E18
GND
J1-5
J1-6
J1-9
J1-14
J1-15
J1-E
J1-F
J1-K
J1-R
J1-S
R23, 4.3, 5W, 10% F2
R24 470k F2
CR20, 1N5815, B9
C14, .33, 100V, 10%, F2
R80, 100, 2R, E5
C15, 300, 250V, E4
R25 600 5W 10% E3
C30 500pF E5
C16, 801, 800V, D5
R21, 200k, 1/2W, F3
CR18, 1N5615, 1A, F3
P/N 15151400
-5VR 358A VR1, D10
-5V
J1-4
J1-D
+16V
C37, 33, 25V D7
CR25, D12 RED
C22 15 25V D12
R26, 1.3, 1/2W, F2
Q4, Q5 P/N 51818111
R27, 1.3J/2W, F2
R28, 1.3J/2W, F2
R29, 51, 5W, 10%, F5
CR35, D7
CR20, 1N5615, 1A, D8
L4 D9 P/N 51918618
C23 270 -10+100% D10
C24 15 15V D12
CR27, RED, D12
R36 2.4k D12
+12V
J1-3
J1-C
CR19 F3
R30, 1.3k, F4
C17, 1, F4, 50V, 10%
C25, 470, -10+100% F6
R31, 47, 1/2W, F5
P/N 51881100 Q5 2N5109 F4
CR26, MR821, 3A, E8
L5, E9 P/N 51918017
C26 5600 12V F8
C27 5600 12V E9
+5V
J1-7
J1-J
J1-8
CR30 RED E12
CR21, 1N5018 1A, F4
CR29, MR821, 3A E8
R40, 1k, 20%, 1/2W, E12
R39, 2.7k, F12
R38, 910, F12
J1-H
CW
R32, 4.7k, F6
CR22 F8
C18, 270, -10+100%, F6
C28, 1.0, 0.03V, F11
R41, 3k, F12
R42, 3k, F12
P/N 51003082 Q6 2N2222 F5
R33 1.3k F5
R44, 330, F12
R45 12 F12
mVR 334 F12
95751300 F7
R71 7.5k F5
R54, 1.3k, F5
C38, 1, 50V, 10%
C4R .1 F5 50V 10%
R72 470k F5
C28, .01, +80-20%, F12
002
E
F
D
C
B
A
1
2
3
4

62949100 K

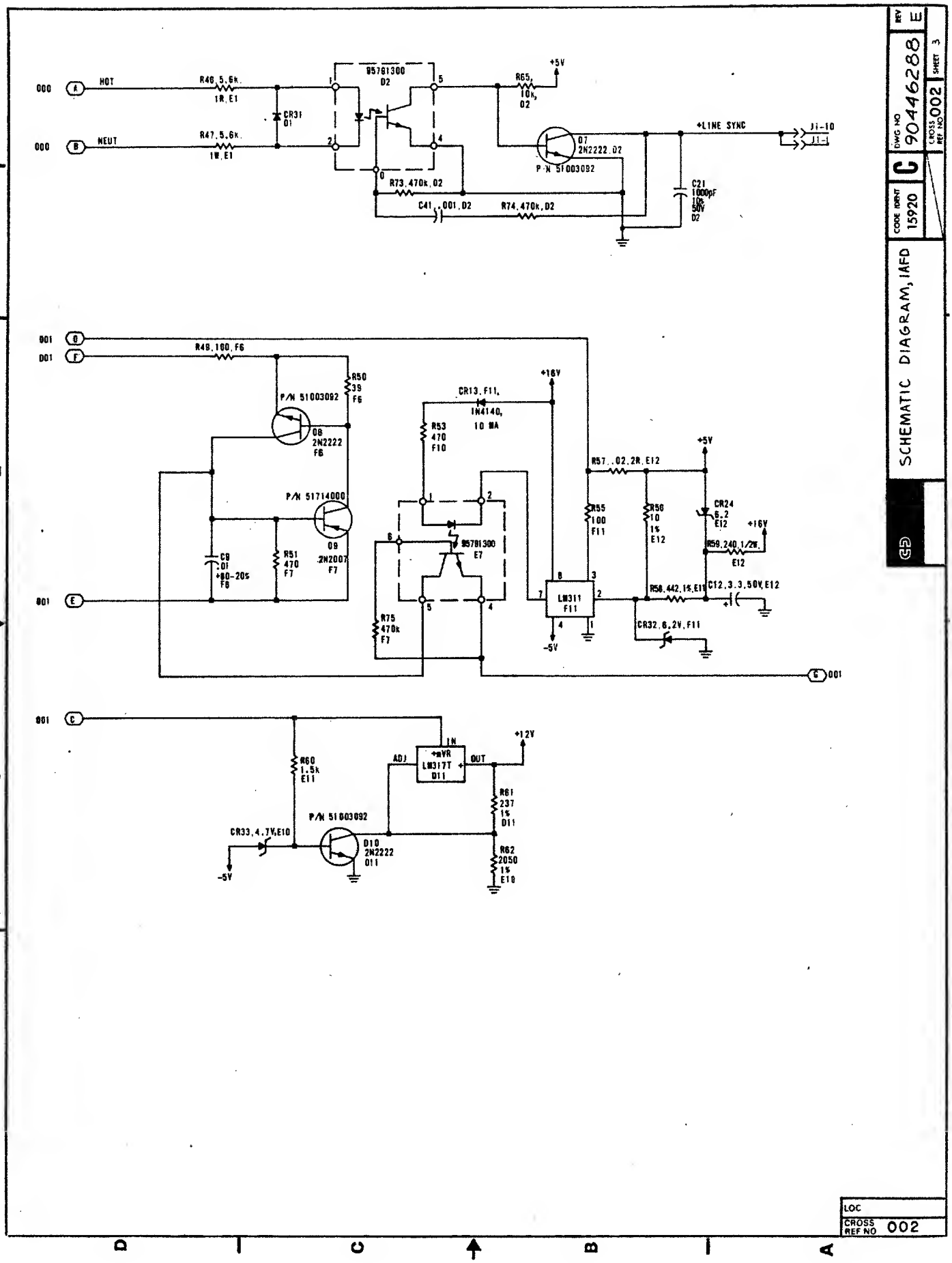
SCHEMATIC DIAGRAM, IAFD
REV E
DWG NO 90446288
SHEET 3
CROSS REF NO 002
CODE IDENT 15920
C
HOT
NEUT
R46, 5.6k, 1W, E1
R47, 5.6k, 1W, E1
CR31 D1
95781300 D2
R65, 10k, D2
+5V
Q7 2N2222 D2
P/N 51003092
+LINE SYNC
J1-10
J1-1
R73, 470k, D2
C41, .001, D2
R74, 470k, D2
C21 1000pF 10% 50V D2
R48, 160, F6
R50 39 F6
P/N 51003092
Q8 2N2222 F6
P/N 51714000
Q9 2N2007 F7
C9 .01 +80-20% F6
R51 470 F7
CR13, F11, 1N4140, 10 MA
+16V
R53 470 F10
95781300 E7
R75 470k F7
LM311 F11
-5V
R57, .02, 2R, E12
R55 100 F11
R56 10 1% E12
CR24 6.2 E12
R59, 240, 1/2W, E12
R58, 442, 1%, E11
C12, 3.3, 50V, E12
CR32, 6.2V, F11
R60 1.5k E11
+12V
LM317T D11
ADJ
IN
OUT
R61 237 1% D11
R62 2050 1% E10
CR33, 4.7V, E10
D10 2N2222 D11
LOC
CROSS REF NO 002

This section provides information necessary to perform on-site maintenance on the flexible disk subsystem. The material presented assumes familiarity with the PLATO system and basic maintenance techniques including use of common CE tools and test equipment. The maintenance information covers checks, adjustments, removal, and replacement of the field-replaceable components as directed by the associated structured analysis method (SAM) listings for the subsystem. Information is organized under the following major headings:

- General Maintenance Information
- Diagnostic and Corrective Maintenance

GENERAL MAINTENANCE INFORMATION

The following paragraphs provide information that the customer engineer should be familiar with before performing maintenance on the terminal. Topics discussed are:

- Suggested Emergency Maintenance Procedure
- Safety Precautions
- Maintenance Tools and Materials
- MOS Circuit-Handling Precautions
- Maintenance Aids
- Location of Major Assemblies

SUGGESTED EMERGENCY MAINTENANCE PROCEDURE

The following procedure provides suggested steps for the customer engineer (CE) to follow when responding to a customer request for maintenance on the subsystem.

Before Leaving For Customer Site

Before leaving for the customer site, the CE should call the customer and talk to the person operating the subsystem at the time the malfunction occurred, then:

1. Determine the following:

   a. Type of symptoms subsystem exhibited to indicate that a malfunction occurred.

   b. Whether subsystem is operating and what symptoms, if any, are present when an attempt is made to operate.

2. Decide course of action to take, for example:

   a. Go to customer site and begin troubleshooting.

   b. Deduce that subsystem itself is probably not at fault and most likely cause of problem is either terminal communication lines or a power reduction or loss. In either case, CE can notify responsible party (common carrier or customer) of problem.

   c. Decide that an error in operating procedure, rather than equipment failure, is probably cause of malfunction, and notify customer of correct operating procedure.

3. If a site maintenance trip is required, CE should try to determine a probable cause for failure and gather necessary tools, manuals, and spare parts that may be needed.

Upon Arriving At Customer Site

Upon arriving at the customer site, the CE should locate the appropriate supervisory personnel and again talk to the subsystem operator concerning the malfunction, then:

1. Visually inspect subsystem for correct input/output and power cable connections.

2. Verify that a malfunction does exist, and then begin to troubleshoot subsystem.

3. After source of malfunction is corrected, CE should:

   a. Run diagnostic self-test routines and appropriate PLATO DIAG tests to ensure that subsystem is operational.

   b. Demonstrate to customer that subsystem is now operating properly within system.

SAFETY PRECAUTIONS

WARNING

Observe the following safety precautions at all times. Failure to do so may cause equipment damage and/or personal injury.

- Hazardous voltages exist in the subsystem. Do not attempt repair unless qualified to do so.
- Exercise caution any time checks or adjustments are being made to terminal when power is applied.
- Always turn power off and disconnect ac power cord when removing/replacing components or cables.

MAINTENANCE TOOLS AND MATERIALS

The maintenance procedures require the use of metric tools and common CE test equipment. No special materials are required.

MOS CIRCUIT-HANDLING PRECAUTIONS

Special handling procedures are necessary for printed-circuit cards containing metal-oxide semiconductor (MOS) integrated circuits. These ICs are susceptible to damage from static electricity. Observe the following precautions when handling the controller board:

- Turn power off before removing/installing or otherwise connecting/disconnecting any circuits.

- Ensure that any item that comes in contact with card is electrically grounded.
- Touch metal chassis frame to bleed off any accumulated static charge before handling card and continue to touch chassis while removing/installing card.
- Handle card only by a noncircuit portion. Connector pins and circuit paths must not be touched.
- Place card in a special conductive envelope whenever card is removed from chassis.

MAINTENANCE AIDS

There is no scheduled maintenance for the subsystem. In the event of failure, the primary maintenance aids are the voltage LED indicators, self-test routines, and DIAG Flexible Disk Diagnostic tests. These aids in conjunction with the SAM troubleshooting listings are structured to isolate the failure to a field-replaceable component/assembly and to provide a procedure number reference to the applicable maintenance procedure to be used for correcting the malfunction. Refer to the Diagnostic and Corrective Maintenance heading for organization of this material.

LOCATION OF MAJOR ASSEMBLIES

Figure 6-1 shows the location of the major assemblies within the subsystem.

DIAGNOSTIC AND CORRECTIVE MAINTENANCE

The following paragraphs describe routines tests, and procedures used to maintain the subsystem.

- Diagnostic Self-Test Routines
- Engineering Services Diagnostic Disk
- DIAG Flexible Disk Diagnostic Disk Tests
- Explanation of SAM Format
- Organization of SAMs and Procedures

DIAGNOSTIC SELF-TEST ROUTINES

The subsystem contains nine diagnostic tests stored in ROM. The starting address is at 0000_{16}. Diagnostic execution is under control of the diagnostic control switches on the controller

board. Status of the diagnostic tests is indicated by the four LEDs also located on the controller board. Refer to section 2 for a detailed description of the diagnostic control switches and LED indicators. The following paragraphs provide a description of the various test routines.

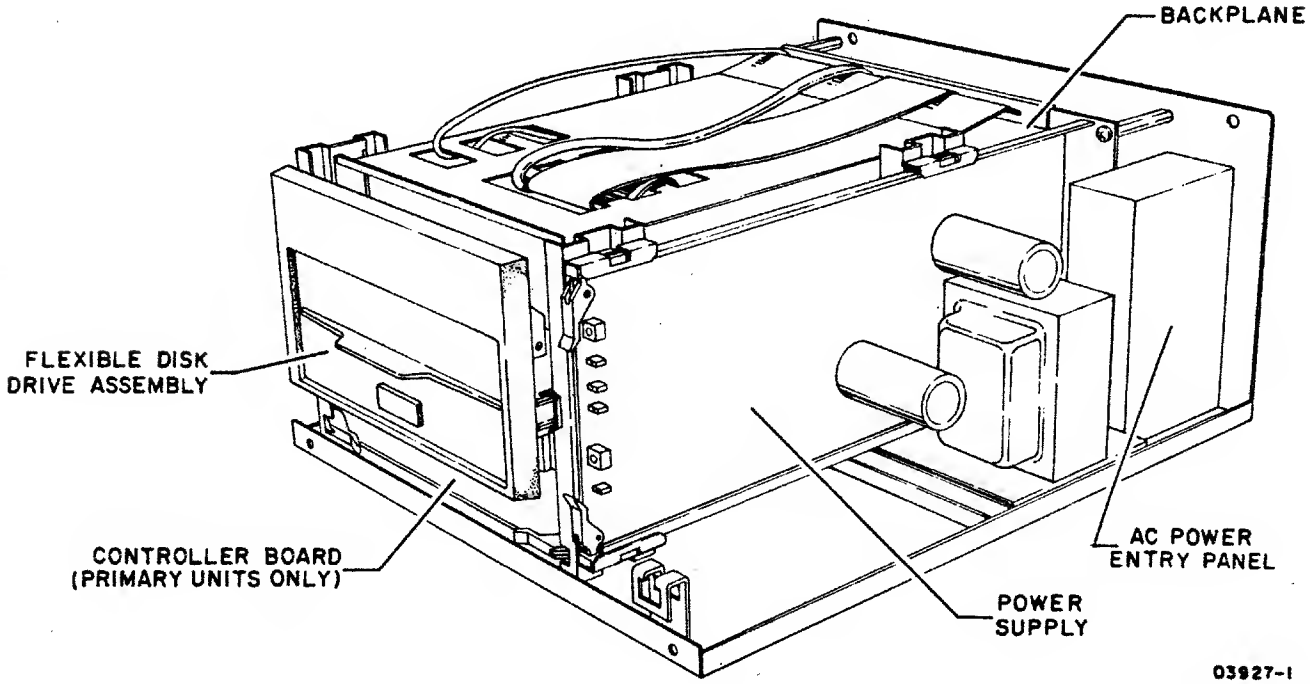

NOTE: COVER AND FRONT PANEL REMOVED FOR CLARITY.

Figure 6-1. Location of Assemblies in Subsystem

LED Test

All four LEDs light momentarily following a power application and after a master reset to test the indicators.

Test 0 - ROM Checksum

The ROM checksum routine tests ROM for the correct checksum value of the stored contents.

Test 1 - RAM Test

Test 1 checks RAM memory (as specified by the diagnostic control switches) for correct operation. This test uses the diagnostic control switches and LEDs to isolate to a failing RAM chip. The first level of error detection is to a specific RAM bank, then to the failing chip within that bank.

Test 2 - Interrupt Generator

Test 2 checks for interrupts by performing writes and reads to the available registers in the interrupt controller IC.

Test 3 - Flexible Disk Controller

Test 3 checks the flexible disk controller IC by performing writes and reads to all available registers in the IC.

Test 4 - DMA Test

Test 4 reads data from the flexible disk controller IC data register to memory using DMA channels 1 and 3.

Test 5 - I/O Loopback Test

Test 5 tests the basic I/O capabilities by interfacing the input/output registers and transferring data via the I/O data bus and checking status.

Test 6 - CTC Test

Test 6 checks the counter/timer circuit by loading a count value and determining that the proper interrupt is generated at count 0.

Test 7 - Writing and Reading the Disk

Test 7 checks for a ready disk drive, then seeks side 1, track 76, last sector and executes writes and reads using the disk DMA channel. This surface area is reserved on all disks; therefore, no alteration is made to stored disk data.

ENGINEERING SERVICES DIAGNOSTIC DISK

This disk provides off-line testing that is similar to the diagnostics found in DIAG. For additional information on diagnostics and where to order the disks, refer to manual titled Engineering Services Diagnostics Disk for PLATO Disk (see Preface for publication number).

DIAG FLEXIBLE DISK DIAGNOSTIC TESTS

Testing can be performed using downline-loaded diagnostics from the PLATO system. Use lesson DIAG to call up the flexible disk diagnostic tests. This diagnostic loads and tests information via the terminal parallel I/O channel. Two modes are tested, DMA operations and interrupt routines. Refer to checkout information in section 3 for details of diagnostic operation.

EXPLANATION OF SAM FORMAT

A SAM listing is a specialized format used to present troubleshooting information in a logical manner. Figure 6-2 illustrates the basic SAM format. Any applicable assumptions or advisory information is provided in the header information of the SAM.

To interpret a SAM, start at the top of the page and determine the response for the first question posed. Then follow the appropriate dashed line beneath the Y or N response. Answer the next question, etc. until the action numbers are reached. Perform the action(s) listed in that column in numerical order to correct the problem.

ORGANIZATION OF SAMs AND PROCEDURES

The SAMs and maintenance procedures are organized in two separate subsections of this manual as follows:

- SAM Listings (section 6A)
- Maintenance Procedures (section 6B)

FIRST TROUBLESHOOTING QUESTION

FIRST ACTION TO BE PERFORMED FOR A NO RESPONSE TO STEP 002

YES OR NO RESPONSE FOR QUESTION BEING ASKED

SAM STEP NUMBER (USED FOR REFERENCING ONLY)

FIRST ACTION TO BE PERFORMED IN THIS COLUMN

UNDERLINE INDICATES THE LAST ACTION OF A NUMERICAL SEQUENCE OF ACTIONS IN A GIVEN COLUMN

UNDERLINE ALSO USED TO INDICATE THAT ONLY ONE ACTION IS TO BE PERFORMED

INDICATES SAM IS CONTINUED ON PAGE 2, COLUMN B

SAM FTP1-1

SAM FTP1 INITIAL TERMINAL TROUBLESHOOTING CHECKS

This SAM is the initial entry document for troubleshooting terminal problems. It assumes that all internal switches are set as required by the PTP/80 application and that terminal has been installed per instructions in section 3 of this manual.

001	Y	N	Do all equipments in terminal power on correctly (procedure FTP1)?
002	Y	N	Does any equipment receive power?
003	1		Check that terminal ac power cord is plugged into site outlet and that site power is available.
004	2		Check for tripped main circuit breaker on ac entry assembly. • If tripped and unable to reset, disconnect all loads from ac entry assembly one at a time and retry to isolate load fault. • If circuit breaker still trips with loads disconnected, replace ac entry assembly.
005	Y	N	Does display power on OK?
006	1		Go to SAM FTP3.
007	Y	N	Does printer power on OK?
008	1		Go to SAM FTP6.
[illegible]	Y	N	Is there a form feed power problem?
010	1		Terminal equipments power on OK.
011	1		Go to SAM FTP7.
012	Y	N	Does resident diagnostic execute following power on application to terminal? Note - diagnostic LEDs L1 and L2 should light during execution and clear at successful completion.
013	1		Check that diagnostic control switches are correctly set. See section 2.
	2 A	2 B	

62986800 4A-1

03680

Figure 6-2. SAM Example

SAMS
SECTION 6A

SAM 1 POWER FAULT ISOLATION

This SAM assumes that the ac power cord is plugged into a live site outlet and is firmly seated at the rear ac connector of the unit.

001	Y	N	Does unit circuit breaker trip when power is applied? Allow time to cool and retry before proceeding with additional steps.
002		Y	Are fan and drive motor running?
003		1	Check that connector J3 from ac entry panel is plugged into backplane.
004		2	Check internal ac wiring connections (see ac power wiring schematic in section 5).
005		3	Check power cord for continuity.
006		4	Check/replace circuit breaker.
007		5	Replace fan or drive unit (procedure 6) as applicable.
008		Y	Are all LEDs on power supply lit?
009		1	Replace power supply (procedure 5).
010		1	Check that correct power supply voltages are present. Voltages should be:
	2	2	
	A	B	

- +5 V ±0.1 V
- -5 V ±0.1 V
- +12 V ±0.1 V

} Test points at front edge of controller board.

- +24 V ±0.5 V — Check at J4 of drive unit (see procedure 5)

NOTE

The +5-V and +24-V outputs are adjustable. Refer to procedure 5. If correct voltages are not obtained, replace power supply (procedure 5).

	A	B		
	1	1		
011		Y	N	Is Power indicator (LED 2^0) lit on controller board (primary units only)?
012			1	Replace controller board (procedure 4).
013		1		Internal power checks are OK.
014	1			Check internal wiring visually for shorts.
015	2			Unseat power supply board and retry. If circuit breaker no longer trips, replace power supply (procedure 5).
016	3			Unseat controller board (primary units only) and retry. If circuit breaker no longer trips, replace controller board (procedure 4).
017	4			Disconnect J4 from disk drive unit and retry. If circuit breaker no longer trips, replace disk drive unit (procedure 6).
018	5			Refer to ac power wiring schematic in section 5 and disconnect wiring/connectors from ac entry panel, line filter, and transformer back to circuit breaker to isolate load fault. Replace defective item.

SAM 2 INTERNAL DIAGNOSTIC CHECKS (MASTER UNITS ONLY)

This SAM isolates faults detected by the internal diagnostic tests. Refer to sections 2 and 3 for information on Diagnostic Control Switches and LED Indicators, and to the Diagnostic Self-Test Routines heading in section 6 for test descriptions.

001	Y	N	Do all four LEDs at front of controller board light momentarily following a power application or a master reset?
002		1	If no LEDs light, check for power fault per SAM 1.
003		2	Replace controller board (procedure 4).
004	N	Y	Is Error LED (2^3) lit and other LEDs off? (Indicates a ROM Checksum Test 0 error.)
005		1	Replace ROM chips, Z80 chip, or controller board (procedure 4).
006	N	Y	Is Error LED (2^3) and Power LED (2^0) lit? (Indicates a RAM memory Test 1 error.) NOTE Verify that switches 2^4 and 2^5 are set correctly for number of RAM banks present. See section 3, Subsystem Installation.
007		1	Replace controller board (procedure 4), or isolate and replace bad RAM chip as follows: o Place switch 2^1 up and switch 2^2 down to display failing RAM bank in LEDs 2^0 through 2^2 (bank 0 is row A, bank 1 is row B, bank 2 is row C, and bank 3 is row D). o Place switch 2^2 up to display failing bit (chip) within bank in LEDs 2^0 through 2^2 (bit 0 is at location 6, bit 7 is at location 1. See figure 6B-4 for board layout). o Replace failing RAM chip and rerun internal diagnostic tests.
	2		
	A		

A
1

008 N Y Is Error LED (2^3) and Write LED (2^1) lit? (Indicates an Interrupt Generator Test 2 error.)

009 1 Replace controller board (procedure 4). Problem with 9519 Interrupt Controller IC or support logic.

010 N Y Is Error LED (2^3), Write LED (2^1), and Power LED (2^0) lit? (Indicates a Flexible Disk Controller Test 3 error.)

011 1 Replace controller board (procedure 4). Problem with 1791 Flexible Disk Controller IC or support logic.

012 N Y Is Error LED (2^3) and Read LED (2^2) lit? (Indicates a DMA Test 4 error.)

013 1 Replace controller board (procedure 4). Problem with 9517 DMA IC or support logic.

014 N Y Is Error LED (2^3), Read LED (2^2), and Power LED (2^0) lit? (Indicates an I/O Loopback Test 5 error.)

015 1 Replace controller board (procedure 4). Problem with support logic.

016 N Y Is Error LED (2^3), Read LED (2^2), and Write LED (2^1) lit? (Indicates a CTC Test 6 error.)

017 1 Replace controller board (procedure 4). Problem with Z80 CTC IC.

018 N Y Is Error LED (2^3), Read LED (2^2), Write LED (2^1), and Power LED (2^0) lit? (Indicates a Writing and Reading the Disk Test 7 error.)

019 1 Verify correct diagnostic control switch settings (see section 3 of manual).

020 2 Verify that flexible disk is properly formatted.

021 3 Verify that flexible disk is Write Protected (slot covered). If not Write Protected, set diagnostic control switch 2^3 up.

022 4 Replace controller board (procedure 4).

023 5 Replace disk drive unit (procedure 6).

3
A

	A	B	
	2		
024	N	Y	Is Error LED (2^3) off, and Read LED (2^2), Write LED (2^1), and Power LED (2^0) lit? (Indicates that controller logic is communicating with drive unit, but test is not complete).
025		1	Check that flexible disk is installed in drive unit (procedure 2) and access door is closed.
026		2	Replace controller board (procedure 4).
027		3	Disconnect secondary unit (if applicable).
028		4	Replace disk drive unit (procedure 6)
029	N	Y	Is Power LED (2^0) lit and other LEDs off?
030		1	Indicates successful completion of resident diagnostic.
031	1		Diagnostic test error. Begin at step 001 of this SAM to isolate failure.

SAM 3 DIAG FLEXIBLE DISK DIAGNOSTIC CHECKS

This SAM provides fault isolation information for problems detected by the DIAG Flexible Disk Diagnostics. Use of this SAM assumes that the internal self-test diagnostics execute without error. Refer to section 3, Checkout, for the procedure to be used to load and execute the DIAG Flexible Disk Diagnostics.

001	N	Y	Is there a terminal log-in or diagnostic loading problem?
002		1	Refer to applicable terminal hardware maintenance manual for troubleshooting information (see preface for publication number).
003	N	Y	Is there a Disk System Not Ready to Load or Incorrect Load message displayed?
004		1	Try loading again by entering option 10 of display prompts.
005		2	Check that power is applied to flexible disk subsystem and last peripheral device connected to parallel I/O channel.
006		3	Check that no flexible disk is installed in drive unit of primary or secondary and perform a long master reset (press and hold Master Reset switch longer than three seconds). (1)
007		4	Check that device address strap/switch of flexible disk subsystem is set correctly.
008		5	Check seating of I/O cable between terminal and flexible disk subsystem and check that terminator is installed at last peripheral device.
009		6	Reseat controller board.
010		7	Replace controller board (procedure 4).
011		8	Refer to applicable terminal hardware maintenance manual for troubleshooting information (see preface for publication number).
012	N	Y	Is there a Bad Seek message displayed?
	2A	2B	

	A	B	
	1	1	
013		1	Verify that side of flexible disk entered for seek and track number are valid.
014		2	Check that a correctly formatted flexible disk is being used.
015		3	Possible bad flexible disk, try a different one.
016		4	Reseat controller board.
017		5	Replace controller board (procedure 4).
018		6	Replace disk drive unit (procedure 6).
019		7	Refer to applicable terminal hardware maintenance manual for additional troubleshooting information.
020	N	Y	Does a switch-test error message appear?
021		1	Verify that switch being toggled is one being referenced on terminal.
022		2	Verify that toggling switch does not change switch position indicated on terminal.
023		3	Reseat controller board.
024		4	Replace controller board (procedure 4).
025	N	Y	Does a send-interrupt-to-terminal error message appear?
026		1	Reseat controller board.
027		2	Check seating of parallel I/O cable and terminator assembly.
028		3	Verify correct terminal operation. If other devices are connected to parallel I/O channel, verify that interrupts work correctly to those devices.
029		4	Replace controller board (procedure 4).
030	N	Y	Does an index-pulse error message appear?
031		1	Reseat controller board.
032		2	Replace controller board (procedure 4).
033		2	Replace power supply (procedure 5).
	3	3	
	A	B	

	A 2	B 2	
034	N	Y	Does a line-sync error message appear?
035		1	Reseat controller board.
036		2	Check seating of internal cable connectors.
037		3	Replace controller board (procedure 4).
038		4	Replace power supply (procedure 5).
039	N	Y	Is there a test-disk error (wrong density, number of sides, etc.)?
040		1	Check flexible disk part number to ensure disk being test has assumed characteristics (density, number of sides, etc.).
041		2	Reseat controller board.
042		3	Replace controller board (procedure 4).
043		4	Replace disk drive unit (procedure 6).
044	N	Y	Does error occur during read-a-sector test?
045		1	Try another flexible disk to verify that media is okay.
046		2	Replace controller board (procedure 4).
047		3	Replace disk drive unit (procedure 6).
048	N	Y	Does a device-address error message appear?
049		1	Ensure that device-address entry being made matches setting of device-address strap/switch.
050		2	Replace controller board (procedure 4).
051	1		DIAG Flexible Disk Diagnostics executed OK.

---

(1) If a long master reset or power application is performed with a system flexible disk installed, internal diagnostics will autoload from disk instead of terminal. Therefore, flexible disk must be removed from drive unit(s), or Switch 2^3, or Switch 2^7 must be up in order to bypass test 7 or to bypass internal diagnostic execution, respectively.

PROCEDURES
SECTION 6B

Procedure 1 - Power Application/Removal

This procedure assumes that the flexible disk subsystem is plugged into the site ac outlet.

WARNING

Applying improper voltage to the flexible disk subsystem can damage components. Read label on back of unit for proper voltage and frequency.

NOTE

Correct operation of the IST parallel interface channel requires that power be applied to the last peripheral device on the channel. Last device supplies +5 V to the terminator.

1. First apply power to terminal. Then apply power to disk subsystem by pulling forward on Power On/Off switch connecting rod (early units) or by pressing Power ON/OFF switch to ON position (later units). See figure 6B-1.

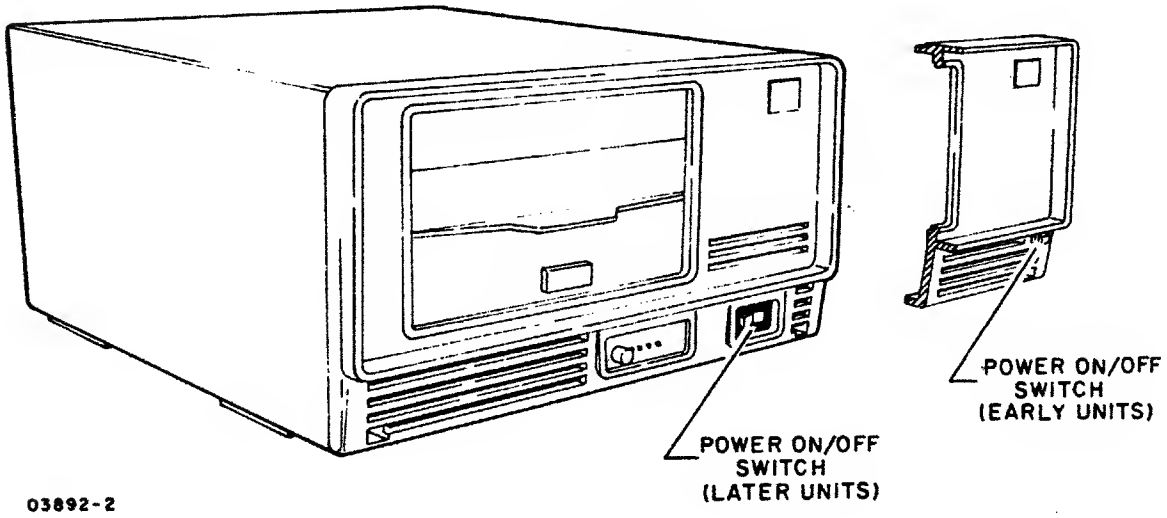

Figure 6B-1. Power On/Off Switch Location

2. Power on is indicated by LED 2^0 being lit (primary units only).

3. Remove power by pushing Power On/Off switch connecting rod in (early units) or by pressing Power On/Off switch to Off position (later units).

Procedure 2 - Flexible Disk Installation/Removal

Install flexible disk in drive unit per the following:

1. Apply power to disk subsystem (procedure 1).

2. Press door latch to open access door (figure 6B-2).

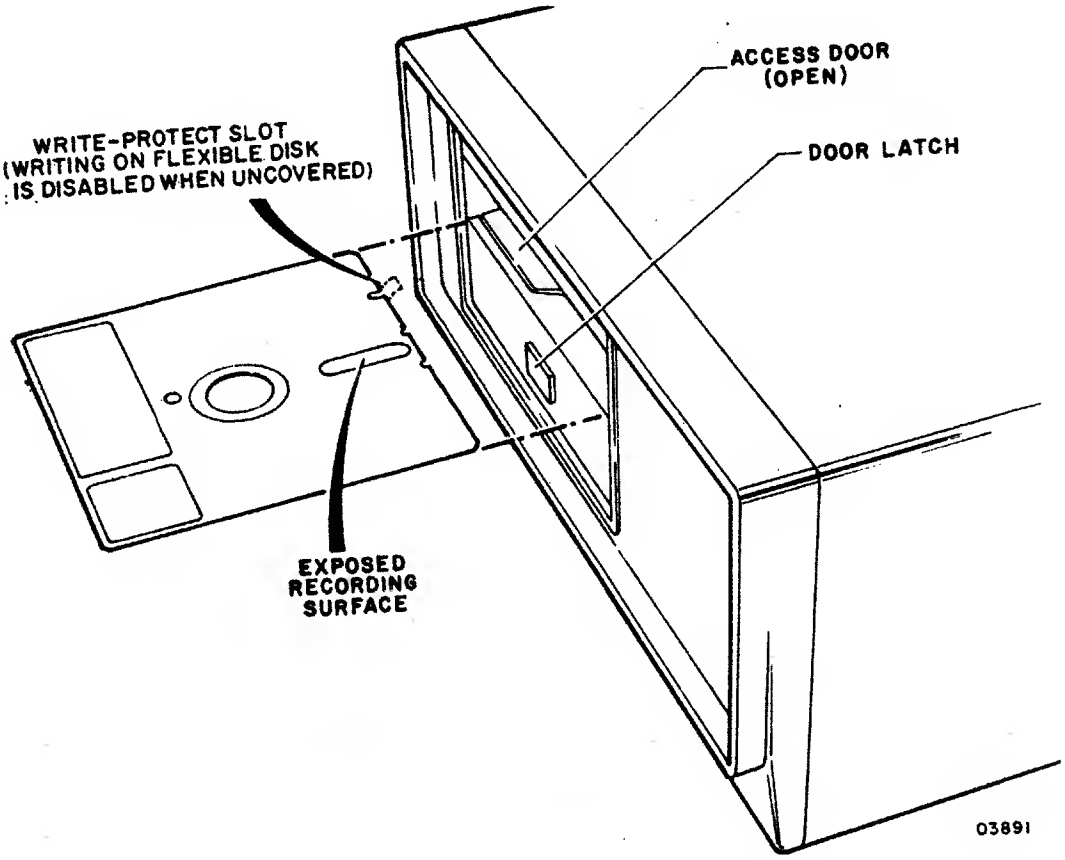

Figure 6B-2. Disk Installation/Removal

3. Remove flexible disk from storage envelope.

NOTE

If information is to be written onto disk, Write-Protect slot must be covered with tape that is opaque to infrared light.

4. Hold flexible disk so that Write-Protect slot is to left and slide disk into drive unit until solidly seated.

5. Close drive access door by pressing down on door until latched.

6. To remove disk, press door latch to open door and remove disk from drive. Place flexible disk in storage envelope.

NOTE

Care should be taken in handling the flexible disks. Recommendations are:

- Do not use lead or grease pencils when writing on flexible disk jacket label as these items deposit flakes. Remove flexible disk before writing on jacket.
- Do not fasten paper clips to flexible disk jacket edges.
- Do not touch disk surface exposed by jacket slot.
- Do not attempt to clean disk surface in any manner.
- Keep flexible disk away from magnetic fields and ferromagnetic materials that may be magnetized.
- Protect flexible disk from liquids, dust, and metallic substances.
- Always place flexible disk in its protective jacket when not in use.
- Store flexible disks loosely in a vertical position, not stacked.

Procedure 3 - Front Panel and Cabinet Hood Removal/Replacement

To remove the front panel or cabinet hood, refer to figure 6B-3 and perform the following:

1. Turn subsystem power off (procedure 1).
2. To remove front panel, remove two screws from panel and tip bottom of panel forward to release.
3. To reinstall front panel, engage retaining slots at top of panel, then tip panel down and install mounting screws.
4. To remove cabinet hood, first remove front panel, then remove four screws from Nylon feet at bottom of unit and two screws at rear of unit.
5. When reinstalling cabinet hood, install two screws at rear of unit first before installing bottom screws and Nylon feet.

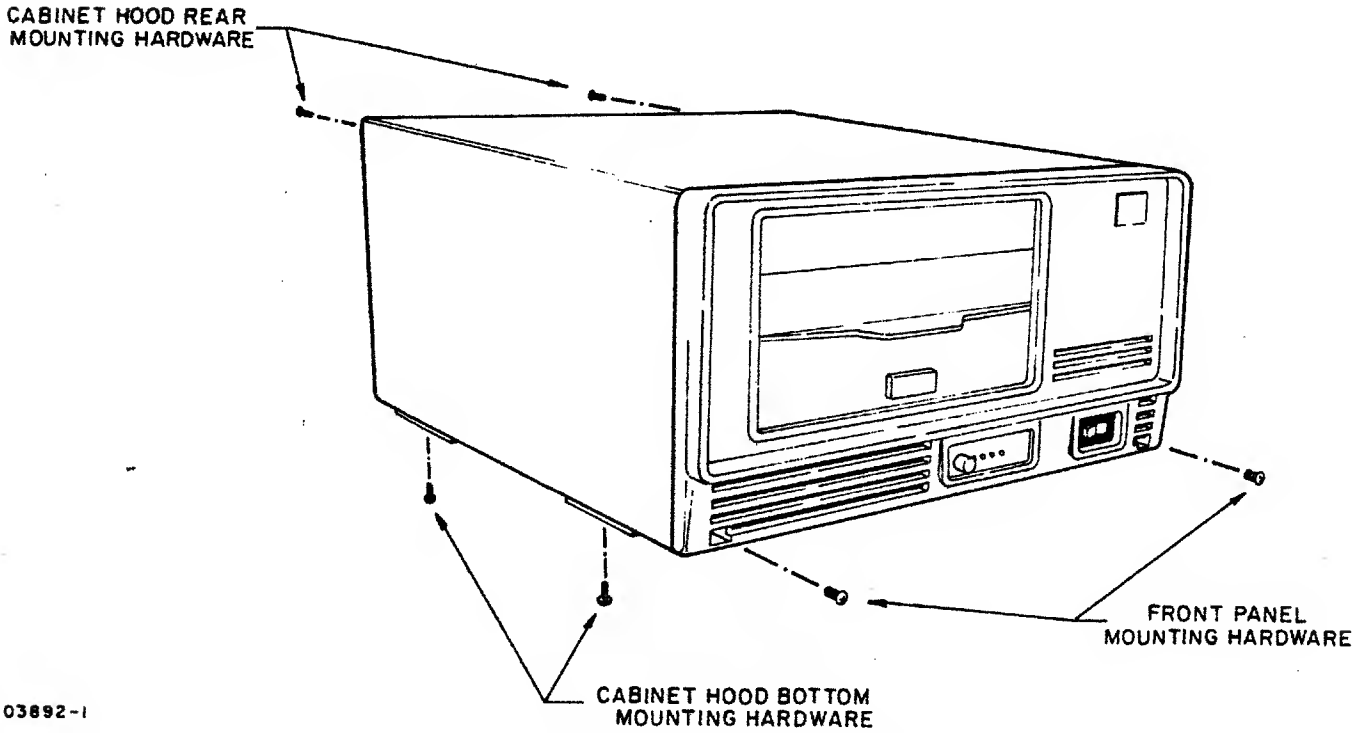

Figure 6B-3. Front Panel and Cabinet Hood Mounting Details

Procedure 4 - Controller Board Removal/Replacement

Perform the following steps to remove/replace the controller board and/or RAM, EROM, and Z80 chips. See figure 6B-4 for board layout.

1. Turn subsystem power off (procedure 1).

2. Remove front panel (procedure 3).

3. Release controller board extractors and slide pc board out of unit.

4. Remove master reset push button and install on replacement board. This button is eccentric which allows for some adjustment. This adjustment is performed in step 6 of this procedure.

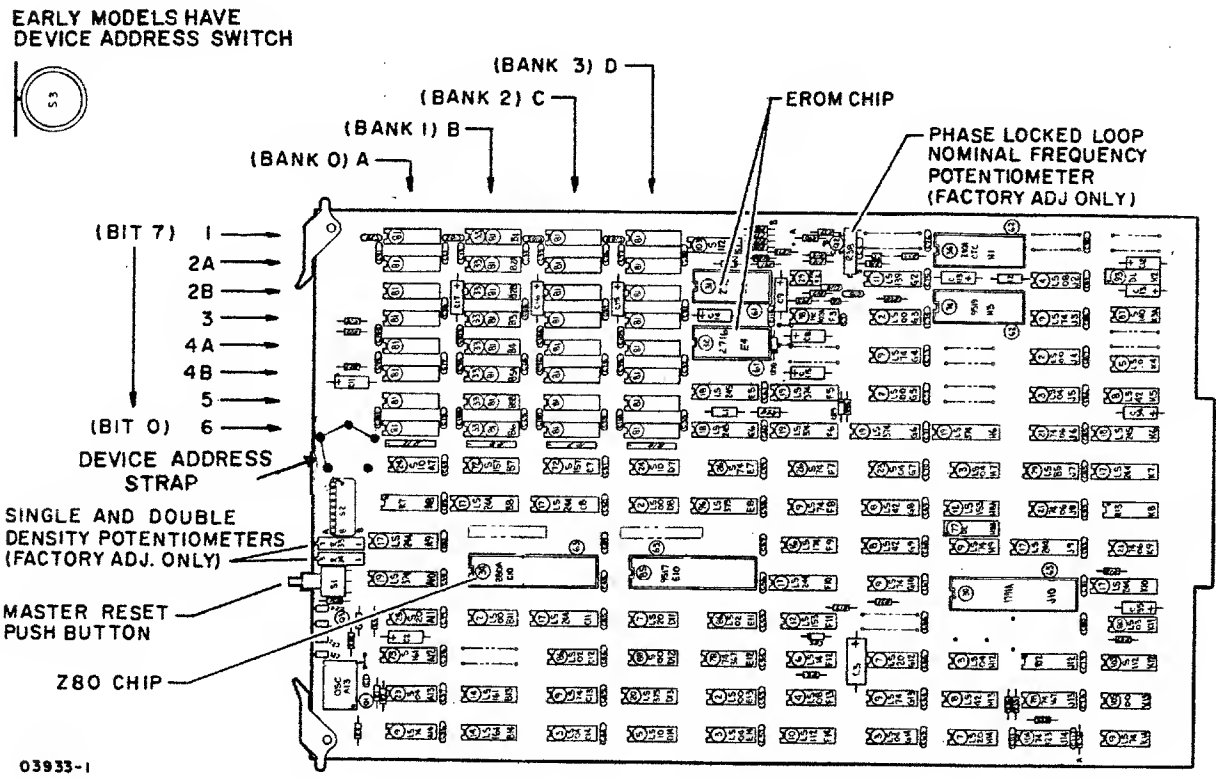

Figure 6B-4. Controller Board Layout

5. When installing a replacement controller board, verify that device address strap* is wired to 7 and diagnostic

---

*If unit has device address switch, it must be set to address 7.

control switches are set correctly for subsystem operation (see section 3 for switch settings). For FA501-A/B only, if RAM options are installed on a controller board that is being replaced, transfer RAM chips to new controller board. Locations for RAM options are:

- 1st RAM option - locations C1, C2A, C2B, C3, C4A, C4B, C5, and C6.
- 2nd RAM option - locations D1, D2A, D2B, D3, D4A, D4B, D5, and D6.
- 3rd RAM option - locations A1, A2A, A2B, A3, A4A, A4B, A5, and A6.

6. Slide controller board in and replace front panel (procedure 3).

7. Rotate master reset push button unit until best fit is achieved.

Procedure 5 - Power Supply Removal/Replacement

This procedure describes removal/replacement of the power supply assembly. See figure 6B-5.

1. Turn subsystem power off (procedure 1).

2. Remove front panel (procedure 3).

3. Release power supply board extractors and slide assembly out of unit.

4. After installing a replacement power supply assembly, perform voltage adjustments as follows:

   - +5-V Adjustment

     a. Connect meter leads as follows:

        - Primary units - Attach meter leads to +5-V and GND test points at left front edge of controller board.

        - Secondary units - Remove disk drive unit from cabinet by pulling drive unit forward until free of slides. Set drive unit on its side, rotated to the left, to allow access to connector J4 at rear of drive PC board. Check that board connectors are seated firmly. Connect + meter lead to J4 pin 2 (+5 V) and - meter lead to J4 pin 3 (ground)

b. Apply power to unit.

c. Adjust top potentiometer on power supply board for +5 V ±0.1 V.

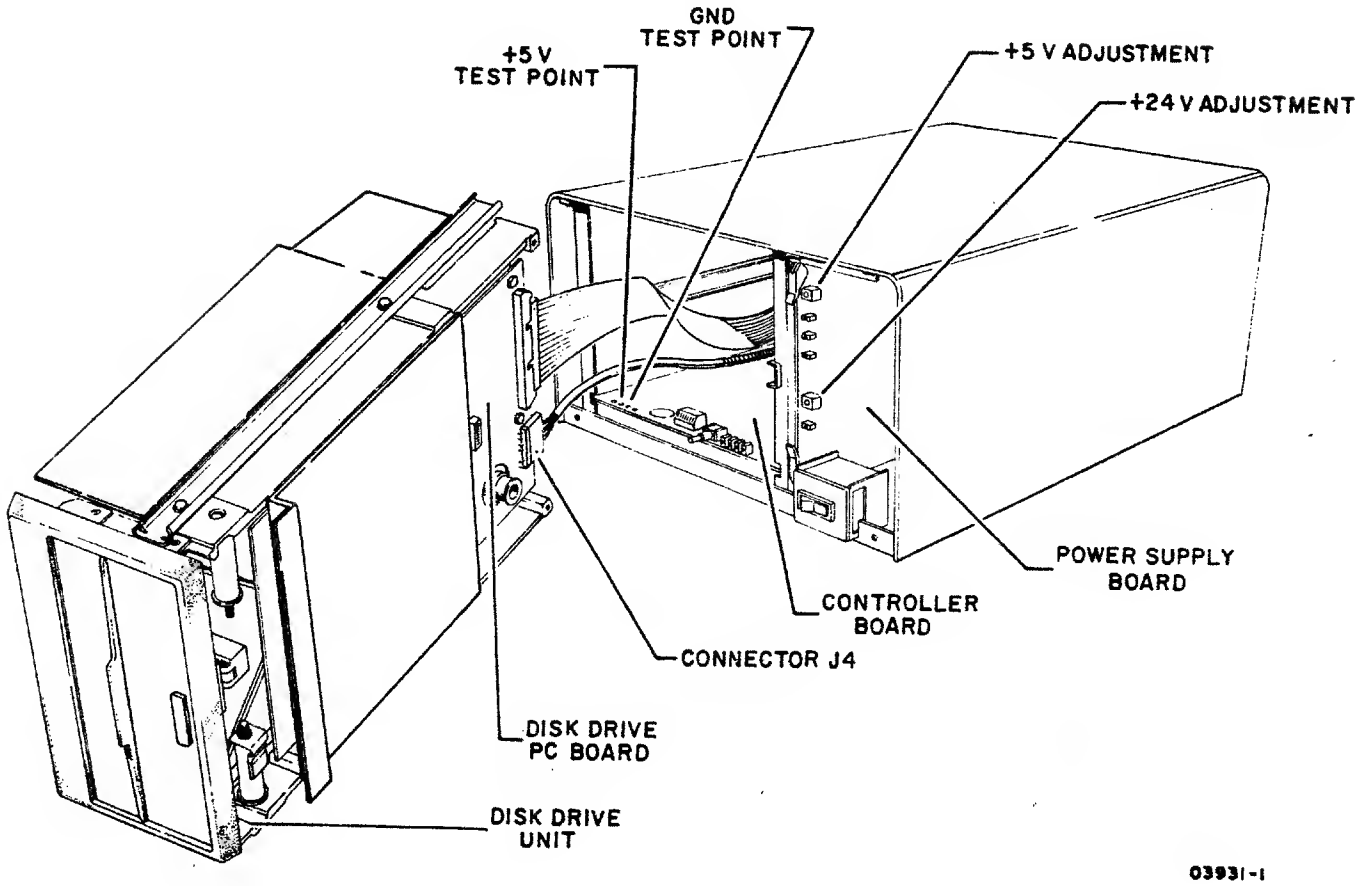

Figure 6B-5. Power Supply Voltage Adjustments

- +24-V Adjustment

a. Turn power off.

b. Remove disk drive unit from cabinet by pulling drive unit forward until free of slides but cables remain firmly attached. Set drive unit on its side, rotated 90° to the left, to allow access to connector J4 at rear of drive PC board.

c. Connect + meter lead to J4 pin 4 (+24 V) and - lead to J4 pin 6 (+24-V return).

d. Apply power to unit.

e. Adjust bottom potentiometer on power supply board for +24 V ±0.5 V.

f. Turn power off, disconnect meter leads, and reinstall drive unit. Check that cables do not bind when installing drive unit.

Procedure 6 - Disk Drive Unit Removal/Replacement

Refer to figure 6B-6 and perform the following steps to remove/replace the disk drive unit.

1. Turn subsystem power off (procedure 1).

2. Remove front panel (procedure 3).

CAUTION

Do not set disk drive unit down with PC board at bottom. Damage to PC components may occur.

3. Remove disk drive unit from cabinet by pulling drive unit forward until free of slides. Set drive unit on its side and disconnect three cables from rear of unit.

4. Remove slides and shields (figure 6B-6) from existing drive unit. The shields are to be installed on the replacement drive as follows:

   - When replacement drive is a primary unit (FA501-A/B/C/D Primary Flexible Drive), both side and bottom shields must be replaced.

   - When using the secondary unit as the replacement (BR801-A,B Secondary Flexible Drive), only the side shield must be replaced (figure 6B-6).

5. Verify that drive pulley on replacement drive unit is installed correctly for 50-Hz/60-Hz operation as required. Pulley must be reversed to change the rotating speed of drive unit. Refer to figure 6B-7 for details.

6. Verify that Unit Select switch (DIP switches 1, 2, 3, and 4) and Ready switch (DIP switches 5, 6, 7, and 8) are set as follows:

   - Primary Unit - DIP switch 1 and 5 ON, remaining switches OFF.

   - Secondary Unit - DIP switch 2 and 6 ON, remaining switches OFF.

7. Remove cardboard head-protective flexible disk from drive unit if replacement unit is being installed.

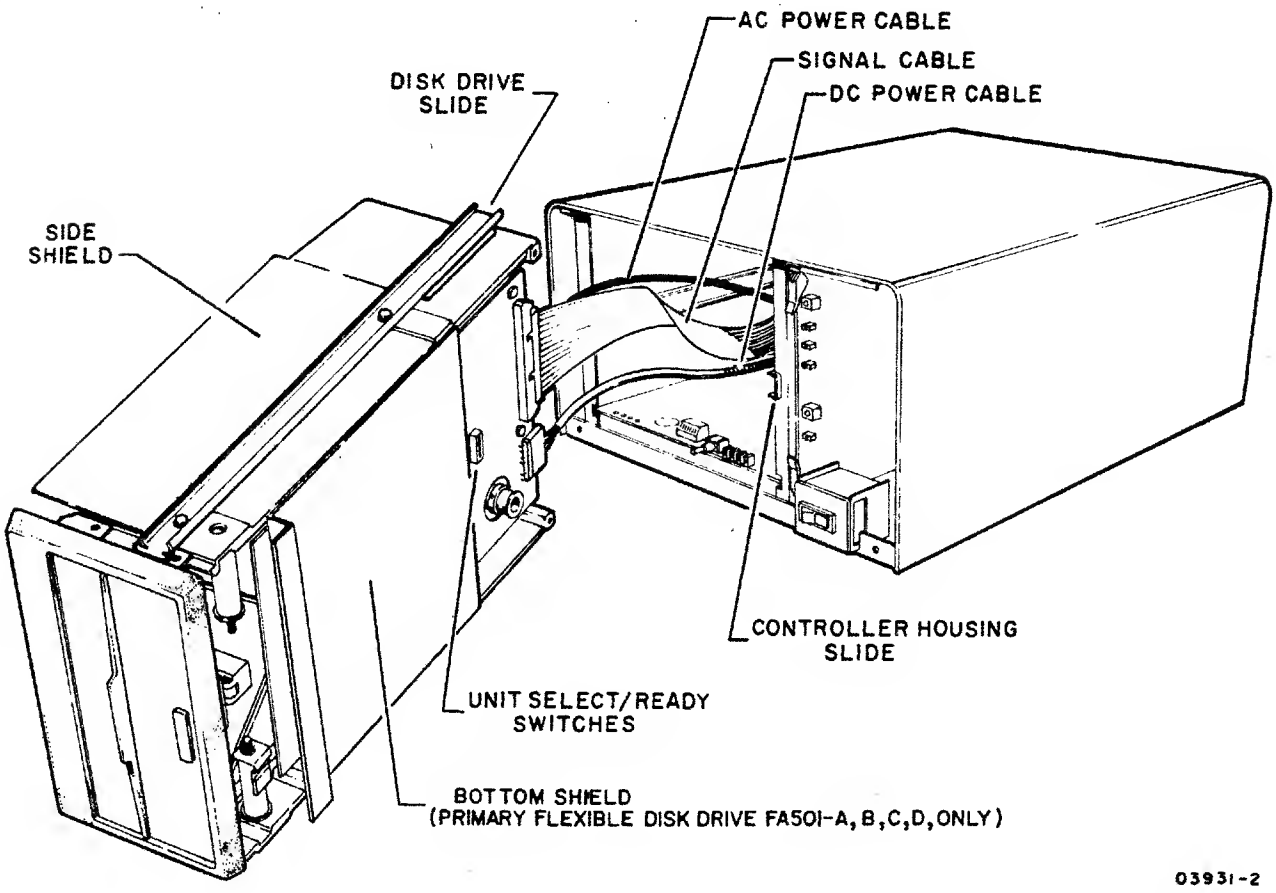

Figure 6B-6. Disk Drive Unit Installation

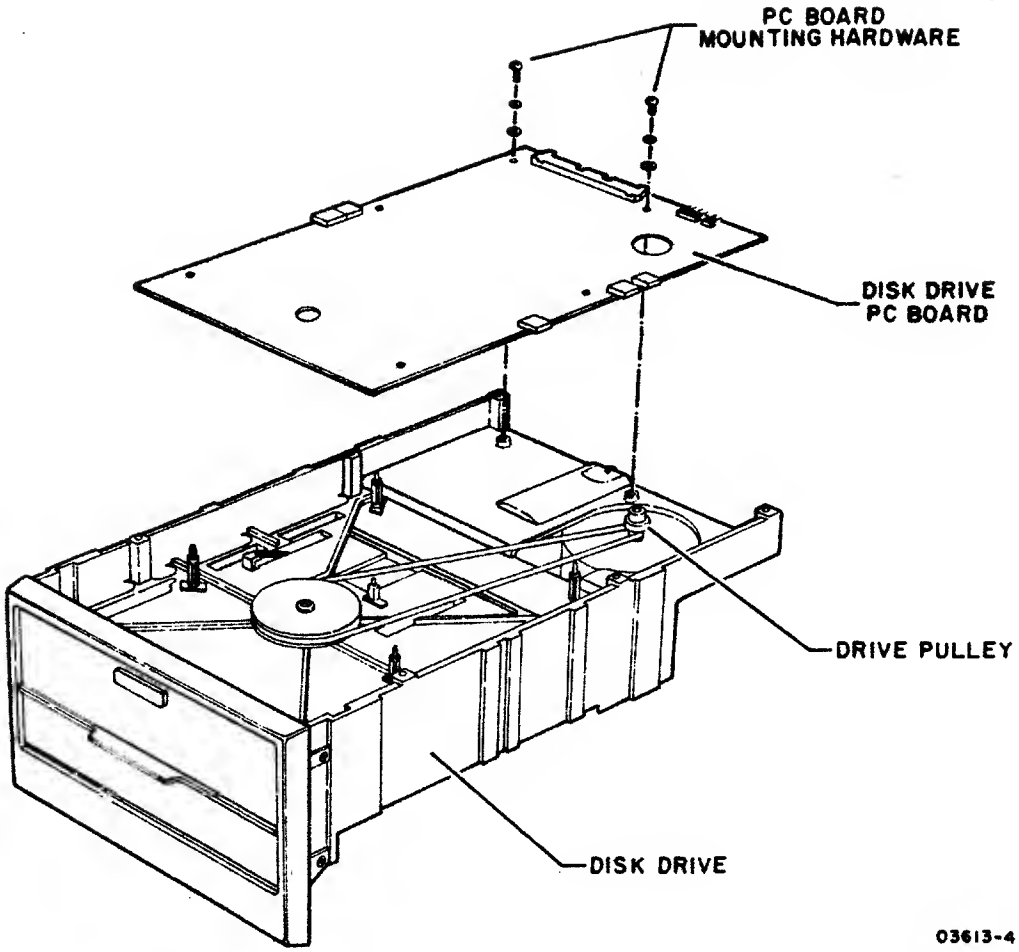

Note - Refer to the 9406 Flexible Disk Drive Assembly Hardware Maintenance manual for additional information if needed (see preface for publication number).

Figure 6B-7. Drive Pulley Details

This section contains the spare parts lists, genealogy charts, and assembly drawings for the flexible disk subsystem. Parts data for the 9406 Flexible Disk Drive unit is contained in a separate publication (see the preface for publication number).

NOTE

Parts list information is provided under separate dividers for the pre-production and production units. Common parts list information is also provided under a separate divider.

Table 7-1 explains the column headings on the asembly parts lists.

TABLE 7-1. EXPLANATION OF COLUMN HEADINGS ON ASSEMBLY PARTS LISTS

COLUMN HEADING	EXPLANATION
FIND NO.	Identifies an electrical or mechanical part on an assembly drawing. If more than one listing appears for a find number, refer to Ll, WK IN, and WK OUT.
Ll (Line Item)	Gives a chronological or historical record of the addition of a new part to a find number. For example, 01 indicates that the part was the first one used, and 02 indicates the second, etc. See also WK IN and WK OUT.
PART NUMBER	Gives the Control Data Corporation part identification. Use this number when ordering replacements.
CD (Check Digit)	Gives the information-control system a means of cross-checking the correctness of a part number.
QUANTITY	Lists the total number of a part required to complete an assembly. The vertical line near the center of the column acts as a decimal point. Numbers to the left of the line are whole numbers. Those to the right of the line are tenths, hundredths, and thousandths.
U/M (Unit of Measure)	Indicates how the information-control system counts or supplies a part.
PART DESCRIPTION	Describes the physical appearance, type, or name of a part.
MC (Material Code)	Supplies additional descriptive data to the information-control system.
YLD (Yield)	A 2-digit number that indicates the usable portion of any quantity of parts expressed as a percentage.
ECO NO. IN	Engineering Change Order that adds a new part to an assembly. See also WK IN.
ECO NO. OUT	Engineering Change Order that deletes a part from an assembly. See also WK OUT.
S/N (Serial Number)	Used to specify an ECO's effectivity by serial number.
WK IN (Week In)	Lists the date when manufacturing begins using a new part and when it is available for parts replacement. For example, 7222 means a part is available of the 22nd week of 1972.
WK OUT (Week Out)	Lists the date when manufacturing no longer uses a part in building an assembly. See also WK IN. Do not order a part after its week-out date.

0643-2A

PARTS DATA FOR PRE-PRODUCTION UNITS ONLY

DWN	R. Trautman	2/80	CONTROL DATA
CHKD	R. Trautman	2-6-80	
ENG	P. Mashuck	2-6-80	
MFG	N/A		
APPR	E. M. Moe	2-16-80	CODE IDENT
	E. M. Moe	2-16-80	15920

TITLE: SPL PRIMARY FLEXIBLE DISK SUBSYSTEM

FIRST USED ON: FA501A/B

PREFIX: SPL | DOCUMENT NO: 66308923 | REV: J

SHEET 1 OF 3

SHEET REVISION STATUS

REVISION RECORD

3	2	1	REV	ECO	DESCRIPTION	DRFT	DATE	APP
00	00	00	00	50004-62	RELEASED CLASS B		7/9/80	
01	01	01	01	51009	ADDED F/N 18 & NOTE 9	WBR	2/13/80	PAM
02	01	02	02	51011	F/N 18 WAS 66312007	WJG 2-19-80	2/14/80	PAM
03	03	03	03	51168	F/N 12 WAS 66139318 F/N 13 WAS 66139319	D.S 7/17/80	7-17-80	PAM
A	A	A	A	11565-88	RELEASED CLASS "A"	/	7/23/80	
B	A	B	B	14165	REVISED PER ECO	WJG 9/1/80	9/5/80	
C	C	C	C	14376	REVISED PER ECO	EE	1/12/81	
D	D	D	D	14571	CHG 1,15,19, DELETE NOTE 3	WJG 3-2-81	3-2-81	
E	D	E	E	14721	F/N 16 WAS 90446140	EE	7/13/81	
F	D	F	F	14663	ADDED F/N 20	EE	7/14/81	
G	G	G	G	14838	ADDED NOTE 10	EE	10/12/81	
G	H	H	H	14820	REVISED PER ECO	11-2-81 RP	11-6-81	
J	J	J	J	15867	INACTIVE, SERVICE USE ONLY, SUPERSEDED BY 66313407	MFD	5-12-83	

INACTIVE

NOTES:

EQUIPMENT	EQUIPMENT CONFIGURATOR	TOP LEVEL ASSEMBLY
FA501A 60HZ	15632205	15632209
FA501B 50HZ	15632206	15632210

THIS SPL APPLIES ONLY TO A/B01 EQUIPMENTS

DETACHED LISTS

AA3180 REV. 8 71 — PRINTED IN U.S.A.

CONTROL DATA CORPORATION | CODE IDENT 15920 | SHEET 2 | SPL | DOCUMENT NO. 66308923 | REV. J

NOTES:

1. These parts are the total required for a unit with no options installed.
2. A unit could have 3 RAM options of 8 RAM ICs for each option for a total of 32 RAM ICs in the unit.

4. Find Numbers 1 thru 7 and 19 are for the 9BED Controller Board.
5. Use Find Number 8 for the FA501A (60HZ unit and use Find Number 9 for the FA501B (50HZ unit).
6. Find Number 10 is for the 50HZ AC Entry only.

8. Find Number 11 is the signal cable used to connect the Primary Flexible Disk Subsystem to the IST Terminal.
9. One of these devices is required on the last device on the Plato IST Parallel I/O channel daisy chain configuration.
10. Original production units were built with P/N 90446140. Current production units are built with P/N 90446290. These cards are interchangable.

AA3180 — PRINTED IN U.S.A.

CONTROL DATA	CODE IDENT 15420	SHEET 3	SPL	DOCUMENT NO. 66308723	REV T

FIND NO.	PART IDENTIFICATION	QUANTITY REQUIRED 60 HZ	QUANTITY REQUIRED 50 HZ	UNIT OF MEAS	NOMENCLATURE OR DESCRIPTION	SPECIFICATIONS, NOTES, OR MATERIAL
1	66312070	1	1		2716 2KX8 ROM	4
2	15153821	8	8		4116 16K RAM	4
3	15163201	1	1		Z80 Processor	4
4	15163444	1	1		FD1791 Disk Controller	4
5	15163458	1	1		9517 DMA	4
6	15163459	1	1		9519 Interrupt Cont.	4
7	15164429	1	1		Z80A-CTC	4
8	15165425	1	0		60Hz Power Cord	5
9	15165426	0	1		50Hz Power Cord	5
10	52918789	0	1		Step down Transformer	6
11	61408865	1	1		25 Pin I/O Cable	8
12	95587103	1	1		Circuit Breaker	
13	15164356	1	1		Line Filter	
14	77618000	1	1		Flexible Disk Assembly	
15	90446284	1	1		9BED Controller Board	
16	90446290	1	1		1AFD Power Supply	10
17	90446143	1	1		9BMD Backplane	
18	15632316	1	1		FT116A Terminator	9
19	66312071	1	1		2716 2KX8 Rom	
20	71493364	1	1		SCR Shoulder Nylon	

AA3101 REV. 8/71

PRINTED IN U.S.A.

62949100 J

DWN	R Trautman	2-80	CONTROL DATA	TITLE	PREFIX	DOCUMENT NO	REV
CHKD	B Trautman	2-6-80		SPL SECONDARY FLEXIBLE DISK	SPL	66308921	E
ENG	P Martinez	2-6-80					
MFG	N/A			FIRST USED ON			
APPR	E. H. Mc	7-16-80	CODE IDENT	BR810A/B		SHEET 1 of 3	
	GR Miller	7-16-80	15920				

SHEET REVISION STATUS

3	2	1
00	00	00
01	00	01
02	01	02
03	03	03
A	A	A
B	A	B
C	A	C
D	D	D
E	D	E

REVISION RECORD

REV	ECO	DESCRIPTION	DRFT	DATE	APP
00	600044	Released Class B		8/9/80	
01	51004	F/N 4 WAS 51897345	WJG 2-11-80		PRM 2-11-8
02	51114	F/N 4 WAS 51940854	WJG 6-6-80		PRM 6-6-80
03	51168	F/N 5 WAS 66309519 F/N 6 WAS 66309318	BS 7/17/80	7-18-80	PRM 7-18-80
A	11565-88	RELEASED CLASS 'A'		7-23-80	
B	14165	REVISED PER ECO	WJH 9/14/80	9-15-80	TBR
C	14721	F/N 9 WAS 90446140	EE	7/13/81	7-14-81
D	14838	ADDED F/N 8 AND NOTE 5	EE	11/12/81	
E	14820	REVISED PER ECO	RC 11-3-81	11-6-81	

NOTES:

EQUIPMENT	EQUIPMENT CONFIGURATOR	TOP LEVEL ASSEMBLY
BR810A 60HZ	15632207	15632211
BR810B 50HZ	15632208	15632212

THIS SPL APPLIES ONLY TO A/B01 EQUIPMENTS.

DETACHED LISTS

AA3180 REV 8 71 PRINTED IN U.S.A.

CONTROL DATA CORPORATION	CODE IDENT	SHEET		DOCUMENT NO.	REV.
	15920	2	SPL	66308921	D

NOTES:

1. These parts are the total required for a unit with no options installed

2. Use find number 1 {60HZ Power Cord} for the BR810A {60HZ unit} and find number 2 {50HZ Power Cord} for the BR810B {50HZ unit}.

3. Use find number 3 for the 50HZ AC Entry only.

4. Find number 4 is the Signal Cable used to connect the BR810A or BR810B to the FA501A or FA501B.

5. Original production units were built wtih P/N 90446140. Current production units are built with P/N 90446290. These cards are interchangable.

AA3185 PRINTED IN U.S.A

CONTROL DATA	CODE IDENT 15920	SHEET 3	SPL	DOCUMENT NO. 66308921	REV. E

FIND NO	PART IDENTIFICATION	QUANTITY REQUIRED 60 HZ	50 HZ	UNIT OF MEAS	NOMENCLATURE OR DESCRIPTION	SPECIFICATIONS, NOTES, OR MATERIAL
1	15165425	1	0		60Hz Power Cord	△2
2	15165426	0	1		50Hz Power Cord	△2
3	51918789	0	1		Step down Transformer	△3
4	61408976	1	1		Secondary Signal Cable	△4
5	95587103	1	1		Circuit Breaker	
6	15164356	1	1		Line filter	
7	77618000	1	1		Flexible Disk Assembly	
8	90446140	REF	REF		9BKD Power Supply	△5
9	90446290	1	1		1AFD Power Supply	Interchangable with F/N 8
10	90446143	1	1		9BMD Backplane	

AA3161 REV. 6/71 PRINTED IN U.S.A.

SHEET REVISION STATUS	REVISION RECORD					
	REV	CO	DESCRIPTION	DRFT	DATE	CHKD	APP
	00	5004-12	RELEASED CLASS B	—	9/1/69	—	
	01	51118	DELETE 90446147	WJG	6-9-80		
	A	11365-88	RELEASED CLASS A	/	7-23-00		

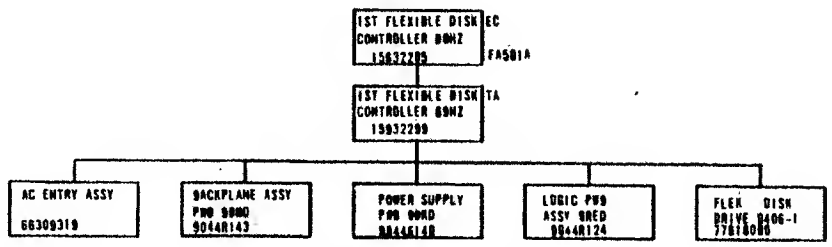

REFERENCE DOCUMENTS

ENGINEERING SPECIFICATION	6042252
SPARE PARTS LIST	86308923
SCHEMATIC DIAGRAM (90KD)	90446139
SCHEMATIC DIAGRAM (90HD)	9044R141
SCHEMATIC DIAGRAM (90ED)	90446122

REFERENCE DRAWING			
COMPONENTS, EXCEPT AS NOTED	TOLERANCE	VALUE	RATING
RES			
CAP			

FIRST USED ON	FA501A	
DWN	R. Hausman	7-12-79
CHKD		
ENGR		7/26/79
MFG		2-10-80
APPR		7-15-80

TITLE
GENEALOGY CHART
PLATO MASTER FLEXIBLE DISK SUBSYSTEM 60 HZ

CODE IDENT 15920 | C | DRAWING NO 66310611

SCALE | CROSS REF NO | SHEET 1 OF 1

62949100 J

SHEET REVISION STATUS	REVISION RECORD					
	REV	CO	DESCRIPTION	DRFT	DATE	CHKD	APP
	00	60004-12	RELEASED CLASS B	—	5/31/79		
	01	51118	DELETE 90446147	WJG	6-9-80	WJG	
	A	11565-88	RELEASED CLASS A				

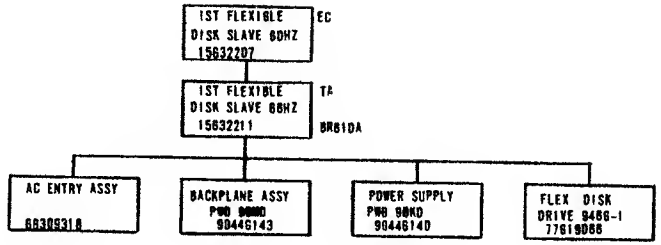

REFERENCE DOCUMENTS

ENGINEERING SPECIFICATION 16342254
SPARE PARTS LIST 66306921
SCHEMATIC DIAGRAM (90KD) 90446138
SCHEMATIC DIAGRAM (90WD) 90446141

REFERENCE DRAWING			
COMPONENTS, EXCEPT AS NOTED	TOLERANCE	VALUE	RATING
RES			
CAP			

[redacted]

FIRST USED ON	BR810A	
DWN	R. Weintraub	9-12-79
CHKD		
ENGR		11-26-79
MFG		2-10-80
APPR		7-15-80

TITLE
GENEALOGY CHART
PLATO SLAVE FLEXIBLE DISK DRIVE 60HZ

CODE IDENT 15920 | C | DRAWING NO 66310612

SCALE | CROSS REF NO | SHEET 1 OF 1

62949100

62949100 J

SHEET REVISION STATUS								

REVISION RECORD

REV	CO	DESCRIPTION	DRFT	DATE	CHKD	APP
00	50004-12	RELEASED CLASS B	/	1/31/80	/	
01	51118	DELETE 90446147	WJG	6-9-80	W	
02	51172	SPL WAS 66308922	W G	2-8-80	W G	
A	11565-88	RELEASED CLASS A		2-11-85		

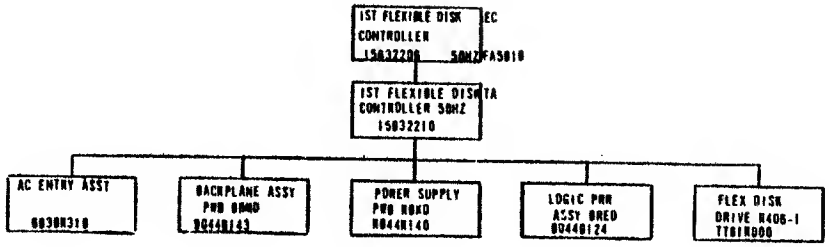

REFERENCE DOCUMENTS

ENGINEERING SPECIFICATION	18042R54
SPARE PARTS LIST	66308823
SCHEMATIC DIAGRAM 90BKD	90446138
SCHEMATIC DIAGRAM 90BRD	90446141
SCHEMATIC DIAGRAM 90BEG	90446122

REFERENCE DRAWING

COMPONENTS, EXCEPT AS NOTED

	TOLERANCE	VALUE	RATING
RES			
CAP			

CONTROL DATA

FIRST USED ON	FA501B	
DWN	R Trautman	9-12-79
CHKD		
ENGR		10/16/79
MFG		7-10-80
APPR		7-15-80

TITLE
GENEALOGY CHART
PLATO MASTER FLEXIBLE DISK
SUBSYSTEM 50 HZ

CODE IDENT 15920 | C | DRAWING NO 66310613

SCALE | CROSS REF NO | SHEET 1 OF 1

SHEET REVISION STATUS	REVISION RECORD						
	REV	CO	DESCRIPTION	DRFT	DATE	CHKD	APP
	00	50009-12	RELEASED CLASS B				
	01	51118	DELETE 90446147	WJG	6-9-80		
	02	51172	SPL WAS 66308920	WJG	7-22-80		
	A	11-15-88	RELEASED CLASS A				

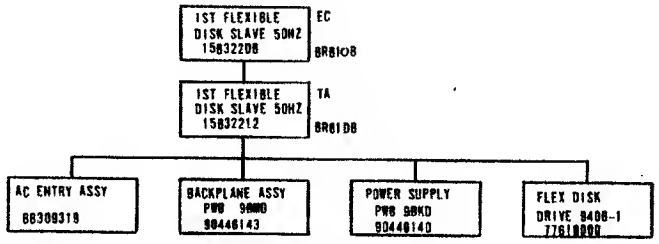

REFERENCE DOCUMENTS

ENGINEERING SPECIFICATION	18042854
SPARE PARTS LIST	85308921
SCHEMATIC DIAGRAM (98KD)	90446138
SCHEMATIC DIAGRAM (98WD)	90446141

REFERENCE DRAWING				[redacted]		TITLE GENEALOGY CHART PLATO SLAVE FLEXIBLE DISK DRIVE 50HZ		
				FIRST USED ON	BR810B			
				DWN	R. Veustman	9-12-79	CODE IDENT 15920	C	DRAWING NO 66310614
COMPONENTS EXCEPT AS NOTED				CHKD				
	TOLERANCE	VALUE	RATING	ENGR		7-10-80		
RES				MFG		7-10-80		
CAP				APPR		7-15-80	SCALE	CROSS REF NO	SHEET 1 OF 1

15632209	CONTROLLER	60 HZ
15632210	CONTROLLER	50 HZ
15632211	SLAVE	60 HZ
15632212	SLAVE	50 HZ

15632209/12

REV	ECO	DESCRIPTION	DRFT	DATE	CHKD	APP
00	[illegible]	RELEASED CLASS "B"	—	[illegible]	—	[illegible]
01	50952	REVISED PER ECO	WJG	1-17-80	WJG	[illegible]
02	50988	P/N 33 WAS 15522017	[illegible]	2-11-80	WJG	[illegible]
03	51026	CHANGE TITLE	WJG	3-3-80	[illegible]	[illegible]
04	51128	ADD P/N'S 34, 35, 36	DS	6-19-80		[illegible]
A	14165-05	RELEASED CLASS "A"	/	[illegible]	/	[illegible]
B	14165	INACTIVE SERVICE USE ONLY SUPERSEDED BY 15632572/73	WJG	9/11/80	WJG	[illegible]

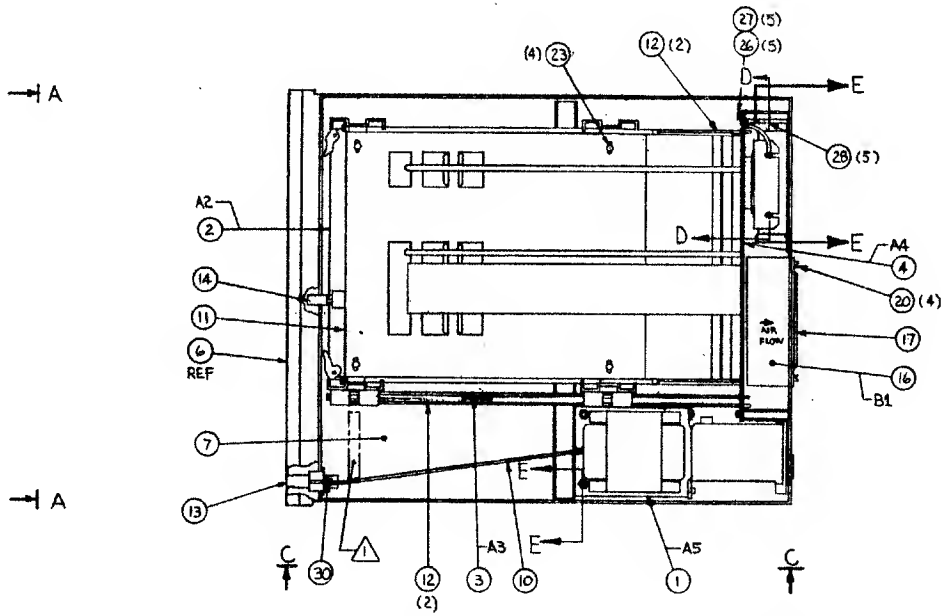

(TOP VIEW SHOWN WITH ITEMS 5,8,9, & 18 REMOVED)

NOTES:

1. MARK "ASSY 156322XX" IN AREA SHOWN PER CDC SPEC 10121508.
2. CONNECT SUBASSEMBLIES AS FOLLOWS:
   PLUG A4P1 INTO A1J9
   PLUG A4P2 INTO A1J4
   PLUG A4P3 INTO A1J1
   PLUG A4P4 INTO B1J1
   PLUG A5P1 INTO A4J3

INACTIVE

METRIC

APL 15632209 THRU 15632212

DO NOT SCALE DRAWING

FA501

TITLE: PLATO FLEXIBLE DISK (TLA)

CODE IDENT 15920 | SIZE D | DRAWING NO 15632209 THRU 15632212

SCALE 1/2 | SHEET 1 OF 2

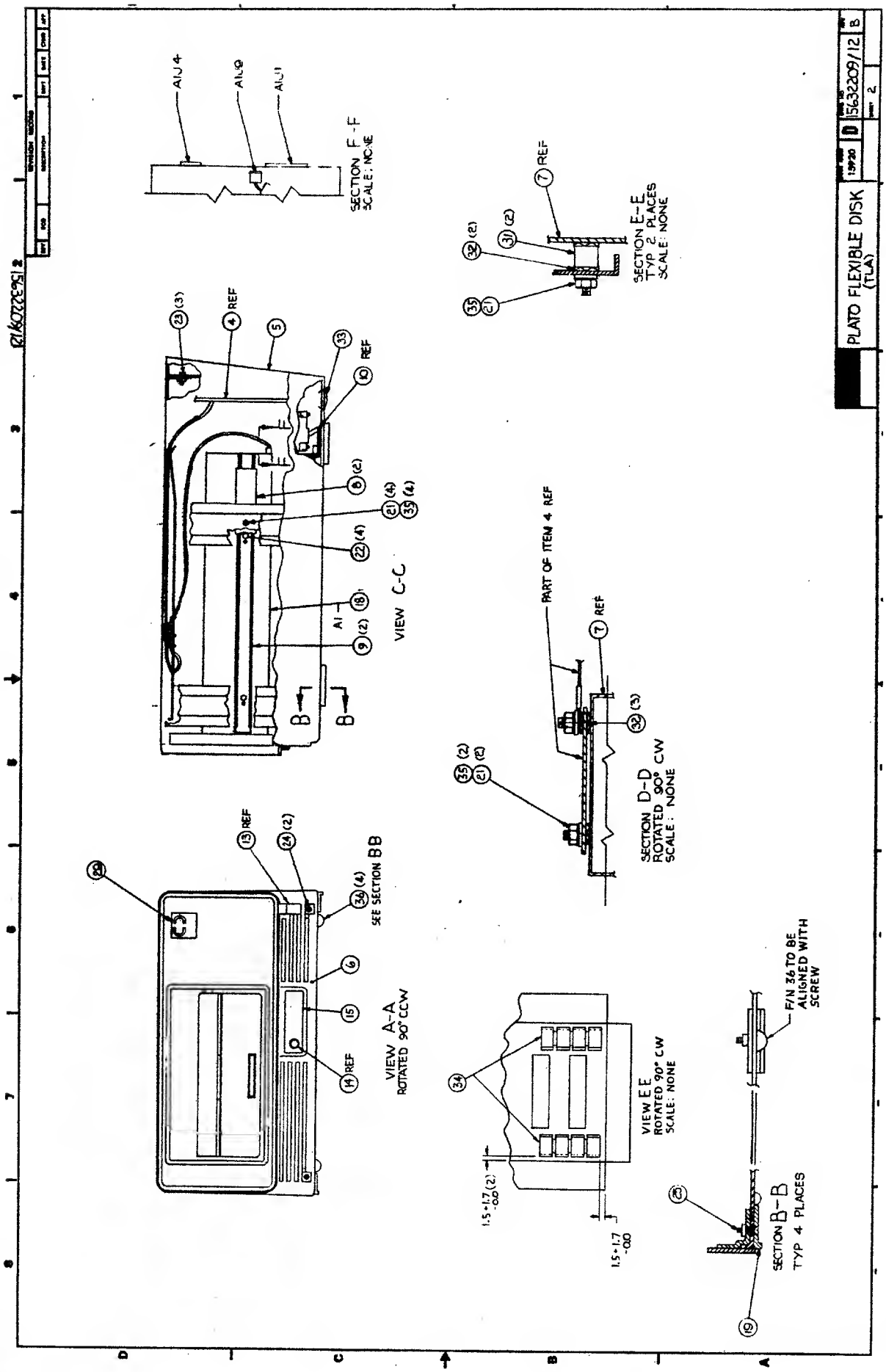
PLATO FLEXIBLE DISK
(TLA)
15632209/12
B
SECTION F-F
SCALE: NONE
SECTION E-E
TYP 2 PLACES
SCALE: NONE
VIEW C-C
PART OF ITEM 4 REF
SECTION D-D
ROTATED 90° CW
SCALE: NONE
VIEW A-A
ROTATED 90° CCW
SEE SECTION BB
VIEW E E
ROTATED 90° CW
SCALE: NONE
F/N 36 TO BE
ALIGNED WITH
SCREW
SECTION B-B
TYP 4 PLACES

BUILD ARC 440

ASSEMBLY PARTS LIST

PRINT DATE	PAGE	FILE CHANGE NO.
09-04-80	1	00014165

DIV.	ASSEMBLY NUMBER	CD	REV.	DWG.	DESCRIPTION	MC	STATUS	STATUS DATE	ENG. RESP.	FILE DATE
0860	15632209	1	B	D	REPLACED BY 15632572 14165	G	INA	09-04-80	FAS01A	09-04-80

T	FIND NO	LI	PART NUMBER	CD	M	QUANTITY		U/M	PART DESCRIPTION	MC	YLD	ECO. NO. IN	ECO. NO. OUT	S/N	WK IN	WK OUT
	001	01	66309318	S		1		PC	REPLACED BY 61409021 14165	A						
	002	01	90446124	1		1		PC	CD ASSY 9BED DISK CONTR	S						
	003	01	90446140	7		1		PC	CD ASSY 9BKD PWR SPLY	A						
	004	01	90446143	1		1		PC	CD ASSY 9BMD BACKPLANE	A						
	005	01	71493032	8		1		PC	COVER METAL AL	P						
	006	01	71493037	7		1		PC	FACE PLATE (SM) PAINTED	P						
	007	01	71493030	0		1		PC	BASE METAL CRS	P						
	008	01	71492950	2		2		PC	TRACK DISK MTG	P						
	009	01	71492951	0		2		PC	SLIDE DISK MTG	P						
	010	01	71492954	4		1		PC	ROD ACTUATOR	P						
	011	01	71492955	1		1		PC	PANEL CABLE SUPPORT	P						
	012	01	71492966	8		4		PC	GUIDE CARD	P						
	013	01	71493189	6		1		PC	BUTTON, MINGED #PLATIC-BLK)	P						
	014	01	71492968	4		1		PC	BUTTON SWITCH	P						
	015	01	71493053	4		1		PC	PANEL SWITCH/INDICATOR	P						
	016	01	51886600	9		1		PC	FAN, SOCFN 115V 50/60MZ 1PM	P						
	017	01	94375401	0		1		PC	GUARD, FAN 50/60HZ	P						
	018	01	77618000	2		1		PC	FLOPPY DISK ASSY	V						
	019	01	71493064	1		4		PC	FOOT	P						
	020	01	91976649	3		4		PC	NSCR PAN PHL M4X40NN	B						
	021	01	91975724	5		8		PC	NUT HEKAGON SZ 5MM	B						

BUILD ARC 440

ASSEMBLY PARTS LIST

PRINT DATE	PAGE	FILE CHANGE NO.
09-04-80	2	00014165

DIV	ASSEMBLY NUMBER	CD	REV.	DWG	DESCRIPTION	MC	STATUS	STATUS DATE	ENG. RESP.	FILE DATE
0860	15632209	1	B	D	REPLACED BY 15632572 14165	G	INA	09-04-80	FAS01A	09-04-80

T	FIND NO	LI	PART NUMBER	CD	M	QUANTITY		U/M	PART DESCRIPTION	MC	YLD	ECO. NO. IN	ECO. NO. OUT	S/N	WK IN	WK OUT
	022	01	15164911	8		4		PC	MSCR HEX-LK PLN N4X8NN STL ZP	B						
	023	01	15164917	5		7		PC	MSCR HEX-LK PLN M5XBNM STL Z	B						
	024	01	91976758	2		2		PC	NSCR PNH N5X10MN	B						
	025	01	91976864	8		4		PC	MSCR MACH FLM M5X10NM	B						
	026	01	91976652	7		5		PC	NSCR PAN PHL M5X10MN	B						
	027	01	91975706	2		5		PC	WASMER LK METRIC N5	B						
	028	01	71493078	1		5		PC	STANDOFF HEX METRIC CRS	B						
	029	01	51918435	2		1		PC	ENBLEM, CDC 1D	P						
	030	01	51918108	7		1		PC	SPG, COMP	P						
	031	01	93109381	9		2		PC	STOFF,NO.1/4 .250L RD ZINC	B						
	032	01	91975684	1		7		PC	WSHR METRIC SZ 5 SCREW	B						
	033	01	93522018	6		1		PC	PLUG,SNAP BUTTON 1 1/4 DIA HO	P						
	034	01	94374900	2			125	PC	STRIP CONTACT	P						
	035	01	89040204	1		8		PC	WSHR, NO.10 DISHED LOCK STL	B						
	036	01	51805700	5		4		PC	BUMPER SELF STICKING	P						
									0036 TOTAL LINES							

BUILD ARC 440

ASSEMBLY PARTS LIST

PRINT DATE	PAGE	FILE CHANGE NO.
09-08-80	1	00014165

DIV.	ASSEMBLY NUMBER	CD	REV.	DWG.	DESCRIPTION	MC	STATUS	STATUS DATE	ENG. RESP.	FILE DATE
0860	15632210	9	B	0	REPLACED BY 15632573 14165	0	INA	09-04-80	FA5018	09-08-80

T	FIND NO	LI	PART NUMBER	CD	M	QUANTITY		U/M	PART DESCRIPTION	MC	TLD	ECO. NO. IN	ECO. NO. OUT	S/N	WK IN	WK OUT
	001	01	66309319	3		1		PC	REPLACED BY 61409022 14165	A						
	002	01	90446124	1		1		PC	CO ASSY 98ED 015K CONTR	S						
	003	01	90446140	7		1		PC	CO ASSY 98KO PWR SPLY	A						
	004	01	90446143	1		1		PC	CD ASSY 98ND BACKPLANE	A						
	005	01	71493032	0		1		PC	COVER METAL AL	P						
	006	01	71493037	7		1		PC	FACE PLATE (SM) PAINTEO	P						
	007	01	71493050	0		1		PC	BASE METAL CR5	P						
	008	01	71492950	2		2		PC	TRACK D15K MTO	P						
	009	01	71492951	0		2		PC	SLIOE OISK MTO	P						
	010	01	71492954	4		1		PC	ROO ACTUATOR	P						
	011	01	71492955	1		1		PC	PANEL CABLE SUPPORT	P						
	012	01	71492966	8		4		PC	BUIOE CARD	P						
	013	01	71493189	6		1		PC	BUTTON, HINGEO #PLATIC-BLK)	P						
	014	01	71492968	4		1		PC	BUTTOM SWITCH	P						
	015	01	71493053	4		1		PC	PANEL SWITCH/INDICATOR	P						
	016	01	51886600	9		1		PC	FAH, 50CFM 115V 50/60HZ 1PH	P						
	017	01	94375401	0		1		PC	GUARO, FAN 50/60HZ	P						
	018	01	77618000	2		1		PC	FLOPPY OI5K ASSY	V						
	019	01	71493064	1		4		PC	FOOT	P						
	020	01	91976649	3		4		PC	MSCR PAN PHL M4X40MM	B						
	021	01	91975724	5		8		PC	NUT HEXAGON 5Z 5MM	B						

BUILD ARC 440

ASSEMBLY PARTS LIST

PRINT DATE	PAGE	FILE CHANGE NO.
09-08-80	2	00014165

DIV.	ASSEMBLY NUMBER	CD	REV	DWG.	DESCRIPTION	MC	STATUS	STATUS DATE	ENG. RESP.	FILE DATE
0860	15632210	9	B	0	REPLACEO BY 15632573 14165	0	INA	09-04-80	FA5018	09-08-80

T	FIND NO	LI	PART NUMBER	CD	M	QUANTITY		U/M	PART DESCRIPTION	MC	TLD	ECO. NO. IN	ECO. NO. OUT	S/N	WK IN	WK OUT
	022	01	15164911	0		4		PC	MSCR HEX-LK PLN M4X8MM STL ZP	B						
	023	01	15164917	5		7		PC	MSCR HEX-LK PLN M5X8MM STL Z	B						
	024	01	91974758	2		2		PC	MSCR PNH M5X10MM	B						
	025	01	91976064	8		4		PC	M5CR MACH FLH M5X10MM	B						
	026	01	91976652	7		5		PC	M5CR PAM PHL M5X10MM	B						
	027	01	91975706	2		5		PC	WA5HER LK METRIC M5	B						
	028	01	71493078	1		5		PC	STANOOFF HEX NETRIC CR5	B						
	029	01	51918435	2		1		PC	EMBLEM, COC IO	P						
	030	01	51918188	7		1		PC	SPG, COMP	P						
	031	01	93109381	9		2		PC	5TOFF,MO.1/4 .250L RO ZINC	B						
	032	01	91975684	1		7		PC	W3HR METRIC 5Z S 5CREW	B						
	033	01	93522018	6		1		PC	PLUB,SNAP BUTTON 1 1/4 OIA HO	P						
	034	01	94374900	2			I25	PC	STRIP CONTACT	P						
	035	01	09040204	1		8		PC	WSHR, NO.10 OISHEO LOCK STL	B						
	036	01	51805700	5		4		PC	BUMPER SELF 5TICKING	P						
									0036 TOTAL LINE5							

BUILD ARC 440

ASSEMBLY PARTS LIST

PRINT DATE	PAGE	FILE CHANGE NO
09-08-80	1	00014165

DIV.	ASSEMBLY NUMBER	CD	REV.	DWG.	DESCRIPTION	MC	STATUS	STATUS DATE	ENG. RESP.	FILE DATE
0860	15632211	7	8	D	REPLACED BY 15632574 14165	G	INA	09-04-80	BR810A	09-08-80

T	FIND NO	LI	PART NUMBER	CD	M	QUANTITY		U/M	PART DESCRIPTION	MC	YLD	ECO. NO. IN	ECO. NO. OUT	S/N	WK IN	WK OUT
	001	01	66309318	5		1		PC	REPLACED BY 61409021 14165	A						
	003	01	90446140	T		1		PC	CD ASSY 98KO PWR SPLY	A						
	004	01	90446143	1		1		PC	CD ASSY 98MD BACKPLANE	A						
	005	01	71493032	8		1		PC	COVER METAL AL	P						
	006	01	71493037	7		1		PC	FACE PLATE (SM) PAINTED	P						
	007	01	71493050	0		1		PC	BASE METAL CRS	P						
	008	01	71492950	2		2		PC	TRACK DISK MTG	P						
	009	01	71492951	0		2		PC	SLIDE DISK MTG	P						
	010	01	71492954	4		1		PC	ROD ACTUATOR	P						
	011	01	71492955	1		1		PC	PANEL CABLE SUPPORT	P						
	012	01	71492966	8		2		PC	GUIDE CARD	P						
	013	01	71493189	6		1		PC	BUTTON, HINGED #PLATIC-BLK)	P						
	014	01	71492968	4		1		PC	BUTTON SWITCH	P						
	015	01	71493054	2		1		PC	PANEL SWITCH INDICATOR	P						
	016	01	51886600	9		1		PC	FAN, 50CFM 115V 50/60HZ 1PH	P						
	017	01	94375401	0		1		PC	GUARD, FAN 50/60HZ	P						
	018	01	77418000	2		1		PC	FLOPPY DISK ASSY	V						
	019	01	71493064	1		4		PC	FOOT	P						
	020	01	91976649	3		4		PC	MSCR PAN PHL M4X40MM	B						
	021	01	91975724	5		8		PC	NUT HEXAGON SZ 5MM	B						
	022	01	15164911	8		4		PC	MSCR HEX-LK PLN M4X8MM STL ZP	B						

BUILD ARC 440

ASSEMBLY PARTS LIST

PRINT DATE	PAGE	FILE CHANGE NO.
09-08-80	2	00014165

DIV.	ASSEMBLY NUMBER	CD	REV.	DWG.	DESCRIPTION	MC	STATUS	STATUS DATE	ENG. RESP.	FILE DATE
0860	15632211	T	8	0	REPLACED BY 15632574 14165	G	INA	09-04-80	BR810A	09-08-80

T	FIND NO	LI	PART NUMBER	CD	M	QUANTITY		U/M	PART DESCRIPTION	MC	YLD	ECO. NO. IN	ECO. NO. OUT	S/N	WK IN	WK OUT
	023	01	15164917	5		7		PC	MSCR HEX-LK PLN M5XBMM STL Z	B						
	024	01	91976T58	2		2		PC	MSCR PNM M5X10MM	B						
	025	01	91976B64	8		4		PC	MSCR MACM FLH M5X10MM	B						
	026	01	91976652	7		5		PC	MSCR PAN PHL M5X10MM	B						
	027	01	91975706	2		5		PC	WASHER LK METRIC M5	B						
	028	01	71493078	1		4		PC	STANDOFF HEX METRIC CR5	B						
	029	01	51918435	2		1		PC	EMBLEM, CDC ID	P						
	030	01	51918188	T		1		PC	SPG, COMP	P						
	031	01	931093B1	9		2		PC	STOFF,NO.1/4 .250L RD ZINC	B						
	032	01	91975684	1		7		PC	WSHR METRIC SZ 5 SCREW	B						
	033	01	93522018	6		1		PC	PLUG,SNAP BUTTON 1 1/4 DIA HD	P						
	034	01	94374900	2			125	PC	STRIP CONTACT	P						
	035	01	09040204	1		8		PC	WSHR, NO.10 DISHED LOCK STL	B						
	036	01	51805700	5		4		PC	BUMPER SELF STICKING	P						
									0035 TOTAL LINES							

BUILD ARC 440

ASSEMBLY PARTS LIST

PRINT DATE	PAGE	FILE CHANGE NO.
09-08-80	1	00014165

DIV.	ASSEMBLY NUMBER	CD	REV.	DWG.	DESCRIPTION	MC	STATUS	STATUS DATE	ENG. RESP.	FILE DATE
0860	15632212	S	B	D	REPLACED BY 15632575 14165	8	INA	09-04-80	BR8108	09-08-80

T	FIND NO.	LI	PART NUMBER	CD	QUANTITY		U/M	PART DESCRIPTION	MC	YLD	ECO. NO. IN	ECO. NO. OUT	S/N	WK IN	WK OUT
	001	01	66309319	3	1		PC	REPLACED BY 61489022 14165	A						
	003	01	90446140	7	1		PC	CD ASSY 98KD PWR SPLY	A						
	004	01	90446143	1	1		PC	CD ASSY 98MD BACKPLANE	A						
	005	01	71493032	8	1		PC	COVER METAL AL	P						
	006	01	71493037	7	1		PC	FACE PLATE (SM) PAINTED	P						
	007	01	71493050	0	1		PC	BASE METAL CRS	P						
	008	01	71492950	2	2		PC	TRACK DISK MTG	P						
	009	01	71492951	0	2		PC	SLIDE DISK MTG	P						
	010	01	71492954	4	1		PC	ROD ACTUATOR	P						
	011	01	71492955	1	1		PC	PANEL CABLE SUPPORT	P						
	012	01	71492966	8	2		PC	GUIDE CARD	P						
	013	01	71493189	6	1		PC	BUTTON, HINGED #PLATIC-BLK)	P						
	014	01	71492960	4	1		PC	BUTTON SWITCH	P						
	015	01	71493054	2	1		PC	PANEL SWITCH INDICATOR	P						
	016	01	51886600	9	1		PC	FAN, 50CFM 115V 50/60HZ 1PH	P						
	017	01	94375401	0	1		PC	GUARD, FAN 50/60HZ	P						
	018	01	77618000	2	1		PC	FLOPPY DISK ASSY	V						
	019	01	71493064	1	4		PC	FOOT	P						
	020	01	91976649	3	4		PC	MSCR PAN PHL M4X40MM	B						
	021	01	91975724	5	8		PC	NUT HEXAGON SZ 5MM	B						
	022	01	15164911	8	4		PC	MSCR HEX-LK PLN M4X8MM STL ZP	B						

BUILD ARC 440

ASSEMBLY PARTS LIST

PRINT DATE	PAGE	FILE CHANGE NO
09-08-80	2	00014165

DIV.	ASSEMBLY NUMBER	CD	REV.	DWG.	DESCRIPTION	MC	STATUS	STATUS DATE	ENG. RESP.	FILE DATE
0860	15632212	S	B	D	REPLACED BY 15632575 14165	8	INA	09-04-80	BR8108	09-08-80

T	FIND NO.	LI	PART NUMBER	CD	QUANTITY		U/M	PART DESCRIPTION	MC	YLD	ECO. NO. IN	ECO. NO. OUT	S/N	WK IN	WK OUT
	023	01	15164917	5	7		PC	MSCR HEX-LK PLN M5X8MM STL Z	B						
	024	01	91976758	2	2		PC	MSCR PNH M5X10MM	B						
	025	01	91976864	8	4		PC	MSCR MACH FLH M5X10MM	B						
	026	01	91976652	7	5		PC	MSCR PAN PHL M5X10MM	B						
	027	01	91975706	2	5		PC	WASHER LK METRIC M5	B						
	028	01	71493078	1	5		PC	STANDOFF HEX METRIC CRS	B						
	029	01	51918435	2	1		PC	EMBLEM, CDC 1D	P						
	030	01	51918188	7	1		PC	SPG, CDMP	P						
	031	01	93109381	9	2		PC	STOFF,NO.1/4 .250L RO ZINC	B						
	032	01	91975684	1	7		PC	WSHR METRIC SZ 5 SCREW	B						
	033	01	93522018	6	1		PC	PLUG,SNAP BUTTON 1 1/4 DIA HD	P						
	034	01	94374900	2		125	PC	STRIP CONTACT	P						
	035	01	89040204	1	8		PC	WSHR, NO.10 DISHED LOCK STL	B						
	036	01	51805700	5	4		PC	BUMPER SELF STICKING	P						
								0035 TOTAL LINES							

66309318	60 HZ
66309319	50 HZ

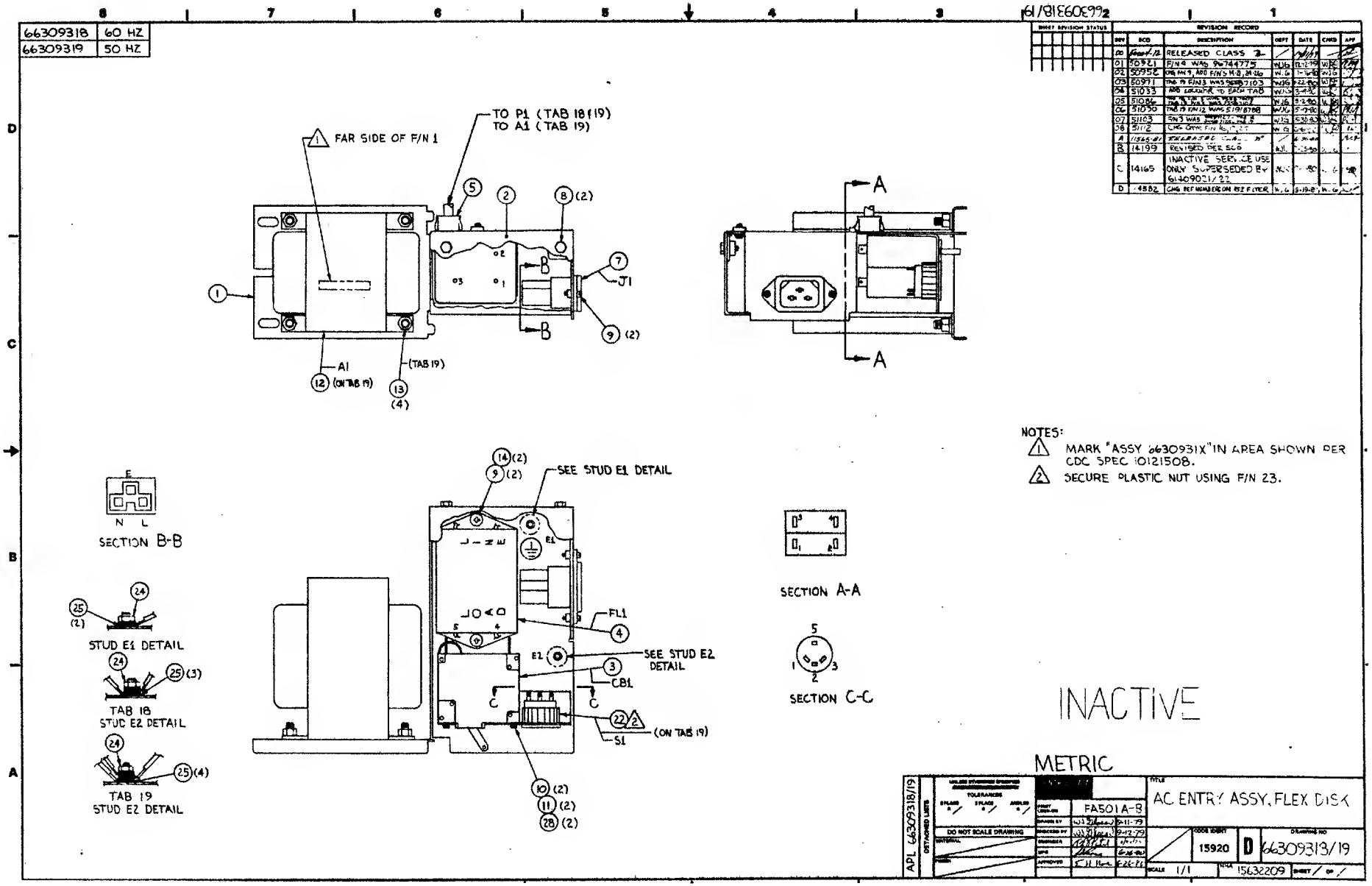

BUILD ARC 230

ASSEMBLY PARTS LIST

PRINT DATE 03-12-81 | PAGE 1 | FILE CHANGE NO 00014582

DIV	ASSEMBLY NUMBER	CD	DIV	DWG	DESCRIPTION	INC	STATUS	STATUS DATE	DWG REF	FILE DATE
0860	66309318	5	D	D	REPLACED BY 61409021 14165	A	INA	09-04-80	FA501A	03-12-81

T	FIND NO	U	PART NUMBER	CD	M	QUANTITY		U/M	PART DESCRIPTION	INC	YLD	SCD NO IN	SCD NO OUT	S/N	WK IN	WK OUT
	001	01	71497952	8		1		PC	BRACKET SWITCH/FILTER/XFORM	P						
	002	01	T1492953	6		1		PC	COVER SWITCH/FILTER	P						
	003	01	95587103	3		1		PC	CB D-P 250 VAC 3 AMP	P						
	004	01	15164356	6		1		PC	FILTER RFI	P						
	005	01	15012408	9		1		PC	RSMG, SNAP-IN .500 H/H .381D	B						
	00T	01	44674034	2		1		PC	CONN POWER RECEPT	P						
	008	01	15164917	5		2		PC	MSCR HEX-LK PLN M5X8MM STL Z	B						
	009	01	91976625	3		4		PC	MSCR PAN PHL M3X6MM	B						
	010	01	10125803	6		2		PC	WSHR, NO.6 SPG LOCK STL ZP	B						
	011	01	10127111	2		2		PC	MSCR PAN PHL 6-32X.250 STL ZP	B						
	014	01	91975669	2		2		PC	WSHR METRIC SCREW SZ 3	B						
	015	01	44674036	7		3		PC	CONN PWR RECPT	P						
	016	01	51T97218	8		4		PC	LUG, NO.10 CRMP-R 22-18AWG	B			14199			8030
	016	02	51797218	8		3		PC	LUG, NO.10 CRMP-R 22-18AWG	B		14199			8030	
	01T	01	24534707	5			249	FT	SLVG, 3/16 HT/SHRINK BLK UL	B			14199			8030
	01T	02	51758103	9			249	FT	INS SLV+CLR,PVC HEAT SHRINK	B		14199			8030	
	018	01	51906200	4		3		PC	CONT, SKT 20-14GA .13017 STR	P						
	019	01	52810001	9			333	FT	WIR 18GA STRD BRN 600V UL PVC	W			14199			8030
	019	02	52810001	9			458	FT	WIR 18GA STRD BRN 600V UL PVC	W		14199			8030	
	020	01	52810005	0			T08	FT	WIR 18GA STRD GRN 600V UL PVC	W			14199			8030
	020	02	52810005	0			833	FT	WIR 18GA STRD GRN 600V UL PVC	W		14199			8030	
	021	01	51906001	6		1		PC	CONN, 3 SKT PLUG FIG 1 NYLON	P						
	024	01	91975724	5		2		PC	NUT HEXAGON SZ 5MM	B						

BUILD ARC 230

ASSEMBLY PARTS LIST

PRINT DATE 03-12-81 | PAGE 2 | FILE CHANGE NO. 00014582

DIV	ASSEMBLY NUMBER	CD	DIV	DWG	DESCRIPTION	INC	STATUS	STATUS DATE	DWG REF	FILE DATE
0860	66309318	5	D	D	REPLACED BY 61409021 14165	A	INA	09-04-80	FA501A	03-12-81

T	FIND NO	U	PART NUMBER	CD	M	QUANTITY		U/M	PART DESCRIPTION	INC	YLD	SCD NO IN	SCD NO OUT	S/N	WK IN	WK OUT
	025	01	91975671	8		6		PC	WASHER EX TOOTH SZ 5	B						
	026	01	61408888	8		REF		PC	REPLACED BY 61409023 14165	O						
	027	01	52810006	8			417	FT	WIR 18GA STRD BLU 600V UL PVC	W		14199			8030	
	028	01	10125605	5		2		PC	WSHR, NO.6 TYP A PLN STL ZP	B		14199			8030	

0027 TOTAL LINES

BUILD ARC 230

ASSEMBLY PARTS LIST

PRINT DATE	PAGE	FILE CHANGE NO.
03-12-81	1	00014582

DIV	ASSEMBLY NUMBER	CD	REV	DWG	DESCRIPTION	MC	STATUS	STATUS DATE	ENG. REP.	FILE DATE
0860	66309319	3	D	D	REPLACED BY 61409022 14165	A	INA	09-04-80	FA501B	03-12-81

T	FIND NO.	U	PART NUMBER	CD	M	QUANTITY		U/M	PART DESCRIPTION	MC	YLD	ECO. NO. IN	ECO. NO. OUT	S/N	WK IN	WK OUT
	001	01	71492952	8		1		PC	BRACKET SWITCH/FILTER/XFORM	P						
	002	01	71492953	6		1		PC	COVER SWITCH/FILTER	P						
	003	01	95587103	3		1		PC	CB D-P 250 VAC 3 AMP	P						
	004	01	15164356	6		1		PC	FILTER RFI	P						
	005	01	15012408	9		1		PC	BSHG, SNAP-IN .500 H/H .381D	B						
	007	01	44674034	2		1		PC	CONN POWER RECEPT	P						
	008	01	15164917	5		2		PC	MSCR HEX-LK PLN M5X8MM STL Z	B						
	009	01	91976625	3		4		PC	MSCR PAN PHL M3X6MM	B						
	010	01	10125803	6		2		PC	WSHR, NO.6 SPG LOCK STL ZP	B						
	011	01	10127111	2		2		PC	MSCR PAN PHL 6-32X.250 STL ZP	B						
	012	01	51918789	2		1		PC	XFMR STEP DOWN 220/240V	P						
	013	01	15165001	7		4		PC	NUT METRIC HEX-LK M5	B						
	014	01	91975669	2		2		PC	WSHR METRIC SCREW SZ 3	B						
	015	01	44674036	7		3		PC	CONN PWR RECPT	P						
	016	01	51797218	8		3		PC	LUG, NO.10 CRMP-R 22-18AWG	B						
	017	01	24534707	5			583	FT	SLVG, 3/16 HT/SHRINK BLK UL	B			14199			8030
	017	02	51758103	9			249	FT	INS SLV+CLR:PVC HEAT SHRINK	B		14199			8030	
	018	01	51906200	4		1		PC	CONT: SKT 20-14GA .1301T STR	P						
	019	01	52810001	9			250	FT	WIR 18GA STRD BRN 600V UL PVC	W			14199			8030
	019	02	52810001	9			458	FT	WIR 18GA STRD BRN 600V UL PVC	W		14199			8030	
	020	01	52810005	0			708	FT	WIR 18GA STRD GRN 600V UL PVC	W			14199			8030
	020	02	52810005	0			833	FT	WIR 18GA STRD GRN 600V UL PVC	W		14199			8030	

BUILD ARC 230

ASSEMBLY PARTS LIST

PRINT DATE	PAGE	FILE CHANGE NO
03-12-81	2	00014582

DIV	ASSEMBLY NUMBER	CD	REV.	DWG.	DESCRIPTION	MC	STATUS	STATUS DATE	ENG. REP.	FILE DATE
0860	66309319	3	D	D	REPLACED BY 61409022 14165	A	INA	09-04-80	FA501B	03-12-81

T	FIND NO.	U	PART NUMBER	CD	M	QUANTITY		U/M	PART DESCRIPTION	MC	YLD	ECO. NO IN	ECO. NO. OUT	S/N	WK IN	WK OUT
	022	01	51918969	0		1		PC	SWITCH VOLTAGE SELECTOR	P						
	023	01	51873600	4			001	OZ	VARNISH INSUL RED GLPT	B						
	024	01	91975724	5		2		PC	NUT HEXAGON SZ 5MM	B						
	025	01	91975671	8		6		PC	WASHER EX TOOTH SZ 5	B						
	026	01	61408889	6		REF		PC	REPLACED BY 61409024 14165	D						
	028	01	10125605	5		2		PC	WSHR: NO.6 TYP A PLN STL ZP	B		14199			8030	
	029	01	51758101	3			188	FT	INS SLV CLR PVC HEAT SHRINK	B		14199			8030	
									0029 TOTAL LINES							

PARTS DATA FOR PRODUCTION UNITS ONLY

OWN	W. Glaser	8/80	CONTROL DATA
CHKD	D. Sand	8/80	
ENG	[illegible]	9/2/80	
MFG	[illegible]	9-2-80	
APPR	[illegible]	9-2-80	CODE IDENT 15920
	[illegible]	9-5-80	

TITLE: SPL 50/60 HZ PRIMARY FLEXIBLE DISK SUBSYSTEM

FIRST USED ON: FA501A-D

PREFIX: SPL | DOCUMENT NO: 66313407 | REV: L

SHEET 1 of 4

SHEET REVISION STATUS

4	3	2	1
	A	A	A
	B	A	B
	C	C	C
	D	D	D
	E	D	E
	F	F	F
	F	G	G
	H	H	H
	J	J	J
	K	J	K
L	L	L	L

REVISION RECORD

REV	ECO	DESCRIPTION	DRFT	DATE	APP
A	12754-76	RELEASED CLASS A		9-3-80	[illegible]
B	14292	ADD F/N 16	DS	9-80	[illegible]
C	14376	REVISED PER ECO	EE	1/12/81	[illegible]
D	14571	CHG F/N 1,12,17, DELETE NOTE 3	WJG 3-2-81	3-2-81	[illegible]
E	14663	ADDED F/N 18	EE	3/6/81	[illegible]
F	14838	ADDED F/N 19 AND NOTE 7	EE	10/12/81	[illegible]
G	14820	REVISED PER ECO	RT 11-13-81	[illegible]	[illegible]
H	14885	ADD FA501K CONFIG	WJG 12-19-81	12-21-81	[illegible]
J	14985	REVISED PER ECO	EE	1/14/82	[illegible]
K	15771	CHANGED F/N 12 & 20	EE	3/14/83	[illegible]
L	15867	REVISED & ADDED SH 4 PER ECO	MD	5-18-83	[illegible]

NOTES 1. Quantities shown are those used per equipment. Quantities used for FA501A are under Heading A. FA501B are under Heading B. FA501C are under Heading C. FA501D are under Heading D.

EQUIPMENT	EQUIPMENT CONFIGURATOR	TOP LEVEL ASSY
FA501A 60 HZ	15632205	15632572
FA501B 50 HZ	15632206	15632573
FA501C 60 HZ (CD110)	15632895	15632983
FA501D 50 HZ (CD110)	15632981	15632982

DETACHED LISTS

AA318C REV 8 71 PRINTED IN U.S.A.

CONTROL DATA CORPORATION | CODE IDENT 15920 | SHEET 2 | SPL | DOCUMENT NO. 66313407 | REV L

NOTES: 2. These parts are the total required for a unit with no options installed.

3. The FA501A/B could have 3 RAM options of 8 RAM IC's for each option for a total of 32 RAM IC's in the unit. This is standard equipment for the FA501C/D.

4. Find Numbers 1 thru 7 and 17 are for the 9BED Controller Board.

5. Find Number 9 is the signal cable used to connect the Primary Flexible Disk Subsystem to the IST Terminal.

6. One of these devices is required on the last device on the Plato IST Parallel I/O channel daisy chain configuration.

7. Original production units were built with P/N 90446140. Current production units are built with P/N 90446443. These cards are interchangable.

AA318B PRINTED IN U.S.A.

CONTROL DATA	CODE IDENT 15920	SHEET 3	5 PL	DOCUMENT NO. 66313407	REV. L

FIND NO.	PART IDENTIFICATION	QUANTITY REQUIRED A	B	C	D	UNIT OF MEAS	NOMENCLATURE OR DESCRIPTION	SPECIFICATIONS, NOTES, OR MATERIAL
1	66312070	1	1	1	1		2716 2KXB ROM	4
2	15153821	8	8	32	32		4116 16K RAM	4
3	15163201	1	1	1	1		Z80 Processor	4
4	15163444	1	1	1	1		FD1791 Disk Controller	4
5	15163458	1	1	1	1		9517 DMA	4
6	15163459	1	1	1	1		9519 Interrupt Cont.	4
7	15164429	1	1	1	1		Z80A-CTC	4
8	15165425	1	0	1	0		60HZ Power Cord	
9	61408865	1	1	1	1		25 Pin I/O Cable	5
10	96837907	1	1	1	1		Circuit Breaker	
11	77618000	1	1	1	1		Flexible Disk Assembly	
12	90446570	1	1	0	0		9BED-3 Controller Board	
13	90446140	REF	REF	0	0		9BKD Power Supply	7
14	90446143	1	1	1	1		9BMD Backplane	
15	15632316	1	1	1	1		FT116A Terminator	6
16	61409021	1	0	1	0		AC Entry Assy 60 HZ	USED ON SERIES CODES A02/C01 AND LATER
17	66312071	1	1	1	1		2716 2KX8 Rom	4
18	71493364	1	1	1	1		8CR Shoulder Nylon	
19	90446443	1	1	1	1		1AFD Power Supply	Interchangable with F/N 13
20	90446571	0	0	1	1		Controller Board	w/Full Memory

AA8181 REV. 8/71 PRINTED IN U.S.A.

CONTROL DATA	CODE IDENT	SHEET 4	5PL	DOCUMENT NO. 66313407	REV. L

FIND NO	PART IDENTIFICATION	QUANTITY REQUIRED A	B	C	D	UNIT OF MEAS	NOMENCLATURE OR DESCRIPTION	SPECIFICATIONS, NOTES, OR MATERIAL
21	15165426	0	1	0	1		50 HZ POWER CORD	
22	61409022	0	1	0	1		AC ENTRY ASSY 50 HZ	USED ON SERIES CODES B02/D01 AND LATER
23	51918789	0	1	0	0		STEP DOWN TRANSFORMER	USED ON SERIES CODES B01 ONLY
24	95587103	1	1	0	0		CIRCUIT BREAKER	USED ON SERIES CODES A01 AND B01 ONLY
25	15164356	1	1	0	0		LINE FILTER	USED ON SERIES CODES A01 AND B01 ONLY

AA8181 REV. 8/71 PRINTED IN U.S.A.

DWN	W. Glaser	8/80	CONTROL DATA	TITLE SPL 50 HZ PRIMARY FLEXIBLE DISK SUBSYSTEM	PREFIX SPL	DOCUMENT NO. 66313408	REV. K
CHKD		9-80					
ENG		9-2-80					
MFG		9-5-80		FIRST USED ON FA501B/D		SHEET 1 of 3	
APPR		9-3-80	CODE IDENT 15920				

SHEET REVISION STATUS

3	2	1
A	A	A
B	B	B
C	C	C
D	C	D
E	E	E
E	F	F
G	G	G
H	H	H
J	H	J
K	K	K

INACTIVE

REVISION RECORD

REV	ECO	DESCRIPTION	DRFT	DATE	APP
A	12754-76	RELEASED CLASS "A"		9-3-80	McA
B	14376	REVISED PER ECO	EE	1/12/81	Jap
C	14571	CHG F/N 1,13,17, DELETE NOTE 3	WJG 3-2-81	3-2-81	
D	14663	ADDED F/N 18	EE	7/14/81	
E	14838	ADDED F/N 19 AND NOTE 7	EE	10/12/81	TLE
F	14820	REVISED PER ECO	11-3-81	11-6-8	
G	14885	ADD FA501/D CONFIG	WJG 12-19-81	12-21-81	
H	14985	REVISED PER ECO	EE	1/8/82	
J	15771	CHANGED F/N 13 & 20	EE	3/17/83	WPB
K	15867	INACTIVE, SERVICE USE ONLY, SUPERSEDED BY 66313407	MD	5/11/83	

NOTES: 1. Quantities shown are those used per equipment. Quantities used for FA501B are under Heading A. FA501D are under Heading B.

EQUIPMENT	EQUIPMENT CONFIGURATOR	TOP LEVEL ASSY
FA501B 50 HZ	15632206	15632573
FA501D 50 HZ (CD110)	15632981	15632982

DETACHED LISTS

AA3180 REV. B 71 PRINTED IN U.S.A.

CONTROL DATA CORPORATION	CODE IDENT 15920	SHEET 2	SPL	DOCUMENT NO 66313408	REV. K

NOTES:

2. These parts are the total required for a unit with no options installed.

3. The FA501B could have 3 RAM options of 8 RAM IC's for each option for a total of 32 RAM IC's in the unit. This is standard equipment for the FA501D.

4. Fine Numbers 1 thru 7 and 17 are for the 9BED Controller Board.

5. Find Number 10 is the signal cable used to connect the Primary Flexible Disk Subsystem to the IST Terminal.

6. One of these devices is required on the last device on the PLATO IST Parallel I/O Channel daisy chain configuration.

7. Original production units were built with P/N 90446140. Current production units are built with P/N 90446443. These cards are interchangable.

AA3189 PRINTED IN U.S.A.

CONTROL DATA		CODE IDENT 15920	SHEET 3	SPL	DOCUMENT NO. 66313408	REV.

FIND NO.	PART IDENTIFICATION	QUANTITY REQUIRED A	B									UNIT OF MEAS		NOMENCLATURE OR DESCRIPTION	SPECIFICATIONS, NOTES, OR MATERIAL
1	66312070	1	1											2716 2KX8 ROM	4
2	15153821	8	32											4116 16K RAM	4
3	15163201	1	1											Z80 Processor	4
4	15163444	1	1											FD1791 Disk Controller	4
5	15163458	1	1											9517 DMA	4
6	15163459	1	1											9519 Interrupt Cont.	4
7	15164429	1	1											Z80A-CTC	4
8	15165426	1	1											50HZ Power Cord	
9	61409022	1	1											AC Entry Assy	
10	61408865	1	1											25 pin I/O Cable	5
11	96837907	1	1											Circuit Breaker	
12	77618000	1	1											Flexible Disk Assy	
13	90446570	1	0											9BED-3 Controller Board	
14	90446140	REF	REF											9BKD Power Supply	7
15	90446143	1	1											9BMD Backplane	
16	15632316	1	1											FT116A Terminator	6
17	66312071	1	1											2716 2KX8 Rom	4
18	71493364	1	1											SCR Shoulder Nylon	
19	90446443	1	1											1AFD Power Supply	Interchangable with F/N 14
20	90446571	0	1											Controller Board	W/Full Memory

AA8181 REV. 8/71 PRINTED IN U.S.A.

DWN	W. Glaser	8/80	CONTROL DATA	TITLE 60 HZ SPL SECONDARY FLEXIBLE DISK	PREFIX SPL	DOCUMENT NO 66313409	REV. E
CHKD		8/80					
ENG		9-3-80					
MFG		9-3-80		FIRST USED ON BR810A		SHEET 1 of 3	
APPR		9-3-80	CODE IDENT 15920				
		9/3/80					

SHEET REVISION STATUS

3	2	1
A	A	A
B	A	B
C	C	C
D	C	D
E	E	E

REVISION RECORD

REV	ECO	DESCRIPTION	DRFT	DATE	APP
A	12754-76	RELEASED CLASS "A"		9-3-80	[illegible]
B	14292	ADD F/N 7	DS	9-80	[illegible]
C	14838	ADDED F/N 8 AND NOTE 3	EE	4/2/81	[illegible]
D	14820	REVISED PER ECO	[illegible] 11-3-81	11-6-81	[illegible]
E	14999	F/N 8 WAS 90446290	EE	2/11/82	[illegible]

NOTES: EQUIPMENT CONFIGURATOR - 15632207

TOP LEVEL ASSEMBLY ----- 15632574

DETACHED LISTS

CONTROL DATA CORPORATION	CODE IDENT 15920	SHEET 2	SPL	DOCUMENT NO. 66313409	REV. E

NOTES:

1. These parts are the total required for a unit with no options installed.

2. Find number 2 is the Signal Cable used to connect the BR810A or BR810B to the FA501A or FA501B.

3. Original production units were built with P/N 90446140. Current production units are built with P/N 90446443. These cards are interchangable.

AA3186 PRINTED IN U.S.A.

CONTROL DATA

CODE IDENT 15920 | SHEET 3 | S.PL. | DOCUMENT NO. 66313409 | REV. E

FIND NO.	PART IDENTIFICATION	QUANTITY REQUIRED	UNIT OF MEAS	NOMENCLATURE OR DESCRIPTION	SPECIFICATIONS, NOTES, OR MATERIAL
1	15165425	1		60HZ Power Cord	
2.	61408976	1		Secondary Signal Cable	2
3	96837907	1		Circuit Breaker	
4	77618000	1		Flexible Disk Assy	
5	90446140	REF		98KD Power Supply	3
6	90446143	1		98MD Backplane	
7	61409021	1		AC Entry Assy.	
8	90446443	1		1AFD Power Supply	Interchangable with F/N 5

62949100 J

DWN	W. Glaser	8/80	CONTROL DATA	TITLE 50 HZ SPL SECONDARY FLEXIBLE DISK	PREFIX SPL	DOCUMENT NO 66313410	REV. D
CHKD		8-80					
ENG		8-80					
MFG		8-80		FIRST USED ON BR810B		SHEET 1 of 3	
APPR		8-3-80	CODE IDENT 15920				
		9/3/80					

SHEET REVISION STATUS

3	2	1
A	A	A
B	B	B
C	B	C
D	D	D

REVISION RECORD

REV	ECO	DESCRIPTION	DRFT	DATE	APP
A	12754-76	RELEASED CLASS "A"		9-3-80	
B	14838	ADDED F/N 8 AND NOTE 3	EE	10/12/81	
C	14820	REVISED PER ECO	CT 11-3-81	11-6-81	
D	14999	F/N 8 WAS 90446290	EE	2/14/82	

NOTES:

EQUIPMENT CONFIGURATOR - 15632208
TOP LEVEL ASSEMBLY ----- 15632575

DETACHED LISTS

AA3180 REV. 8 71

CONTROL DATA CORPORATION	CODE IDENT 15920	SHEET 2	SPL	DOCUMENT NO. 66313410	REV. D

NOTES:

1. These parts are the total required for a unit with no options installed.

2. Find number 3 is the Signal Cable used to connect the BR810A or BR810B to the FA501A or FA501B.

3. Original production units were built with P/N 90446140. Current production units are built with P/N 90446443. These cards are interchangable.

CONTROL DATA	CODE IDENT 15920	SHEET 3	S PL	DOCUMENT NO. 66313410	REV. D

FIND NO.	PART IDENTIFICATION	QUANTITY REQUIRED										UNIT OF MEAS		NOMENCLATURE OR DESCRIPTION	SPECIFICATIONS, NOTES, OR MATERIAL
1	15165426	1												50HZ Power Cord	
2	61409022	1												AC Entry Assy	
3	61408976	1												Secondary Signal Cable	△2
4	96837907	1												Circuit Breaker	
5	77618000	1												Flexible Disk Assembly	
6	90446140	REF												9BKD Power Supply	△3
7	90446143	1												9BMD Backplane	
8	90446443	1												1AFD Power Supply	Interchangable with F/N 6

PRINTED IN U.S.A.

	FA501A	FA501C
EC	15632205	15632895
TLA	15632572	15632993
PWB ASSY 9BED	90446570	90446571

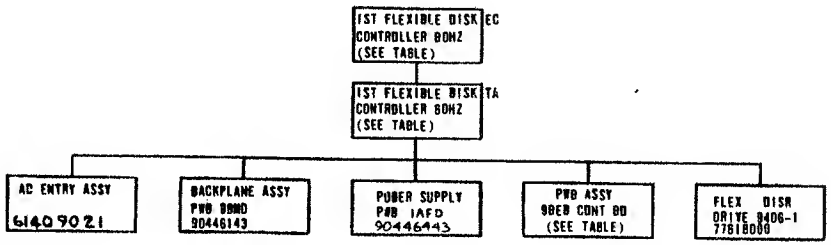

SHEET REVISION STATUS							

REVISION RECORD

REV	CO	DESCRIPTION	DRFT	DATE	CHKD	APP
		RELEASED CLASS				
01	51118	DRIVE 90446147	WJG	6-9-80	WJG	
B	14165	REVISED PER ECO	WJG	9/14/80	WJG	
C	14376	LOGIC WAS 90446124	E.E	11/14/81	EE	
D	14571	9BED PWB WAS 90446660	WJG	12-81	WJG	
E	14721	REVISED PER ECO	EE	7/13/81	EE	
F	14820	REVISED TITLE		11-3-81		
G	14885	ADD TABLE	WJG	12-19-81	WJG	
H	14985	PWB 1AFD WAS 90446290	EE	1/8/82	EE	
J	15771	REVISED PER ECO	EE	3/14/83		

REFERENCE DOCUMENTS

ENGINEERING SPECIFICATION 11-042854
SPARE PARTS LIST 66313407
SCHEMATIC DIAGRAM (1AFD) 90446288
SCHEMATIC DIAGRAM (9BMD) 90446141
SCHEMATIC DIAGRAM (9BED) 90446258
SCHEMATIC WIRING 62201057

REFERENCE DRAWING			
COMPONENTS, EXCEPT AS NOTED	TOLERANCE	VALUE	RATING
RES			
CAP			

CONTROL DATA		
FIRST USED ON	FA501A/C	
DWN	R. Yourtman	9-12-79
CHKD		
ENGR		10/26/79
MFG		7-10-80
APPR		7-15-80

TITLE
GENEALOGY CHART
PRIMARY FLEXIBLE DISK SUBSYSTEM 60 HZ

CODE IDENT 15920 | C | DRAWING NO 66310611

SCALE | CROSS REF NO | SHEET 1 OF 1

62949100 J

	FA501B	FA501D
EC	15832206	15632981
TLA	15632573	15632982
PWB ASSY 9BED	90446570	90446571

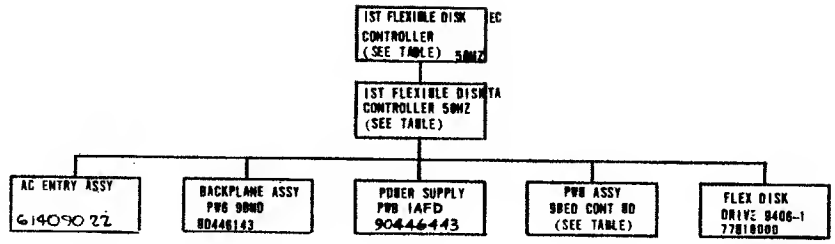

SHEET REVISION STATUS

REVISION RECORD

REV	CO	DESCRIPTION	DRFT	DATE	CHKD	APP
00	50004	RELEASED CLASS B	/	4/21/79	/	
01	51118	DELETE 90446147	WJG	6-9-80	WJG	PAM
02	51172	SPL WAS 66308322	WJG	7-22-80	WJG	PAM
A	11565-00	RELEASED CLASS A	/	7-23-80	/	
B	14165	REVISED PER ECO	WJG	9-11-80	WJG	
C	14376	LOGIC WAS 90446124	EE	1/12/81		
D	14571	9BRD PWB WAS 90446260	WJG	3-2-81	WJG	
E	14721	REVISED PER ECO	EE	7/13/81	EE	
F	14820	REVISED PER ECO	RC	11-5-81	RC	
G	14885	ADD TABLE	WJG	12-19-81	WJG	
H	14985	PWB 1AFD WAS 90446290	EE	1/8/82	EE	
J	15771	REVISED PER ECO	EE	3/14/83	EE	
K	15867	REVISED PER ECO	MA	5-18-83		

REFERENCE DOCUMENTS

ENGINEERING SPECIFICATION	16042854
SPARE PARTS LIST	66313407
SCHEMATIC DIAGRAM 1AFD	90446288
SCHEMATIC DIAGRAM 9BWD	90446141
SCHEMATIC DIAGRAM 9BED	90446258
SCHEMATIC WIRING	6220 057

REFERENCE DRAWING

COMPONENTS, EXCEPT AS NOTED

	TOLERANCE	VALUE	RATING
RES			
CAP			

CONTROL DATA

FIRST USED ON	FA501B/D	
DWN	R. Pauttman	2-12-79
CHKD		1/26/83
ENGR		2-10-80
MFG		
APPR		7-15-80

TITLE
GENEALOGY CHART
PRIMARY FLEXIBLE DISK
SUBSYSTEM 50 HZ

CODE IDENT 15920 | C | DRAWING NO 66310613

SCALE | CROSS REF NO | SHEET 1 OF 1

62949100 J

62949100 G

SHEET REVISION STATUS

REVISION RECORD						
REV	CO	DESCRIPTION	DRFT	DATE	CHKD	APP
00	50004.12	RELEASED CLASS B		8/31/79		
01	51118	DELETE 90446147	WJG	6-9-80	WJG	RM
A	11565-80	RELEASED CLASS "A"		7-23-80		MCF
B	14165	REVISED PER ECO	WJG	9/11/80	WJG	
C	14721	REVISED PER ECO	EE	7/13/81	EE	
D	14820	REVISED PER ECO	RC	11-3-81	RC	
E	14985	PWB IAFD WAS 90446290	EE	1/8/82	EE	

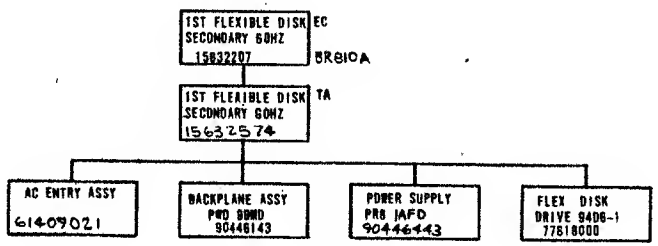

REFERENCE DOCUMENTS

ENGINEERING SPECIFICATION.....16042854
SPARE PARTS LIST.....66313409
SCHEMATIC DIAGRAM (IAFD).....90446288
SCHEMATIC DIAGRAM (98MD).....90446141
SCHEMATIC WIRING.....62201057

REFERENCE DRAWING			
COMPONENTS, EXCEPT AS NOTED			
	TOLERANCE	VALUE	RATING
RES			
CAP			

CONTROL DATA

FIRST USED ON	BR810A	
DWN	R. Trautman	8-12-79
CHKD		
ENGR		1-26-77
MFG		7-10-80
APPR		7-15-80

TITLE
GENEALOGY CHART
SECONDARY FLEXIBLE DISK DRIVE 60HZ

CODE IDENT 15920 | C | DRAWING NO 66310612

SCALE | CROSS REF NO | SHEET 1 OF 1

66310612

SHEET REVISION STATUS	

REVISION RECORD

REV	CO	DESCRIPTION	DRFT	DATE	CHKD	APP
00	5000	RELEASED CLASS B		4/1/79		
01	51118	DELETE 90446147	WJG	6-9-80	WJG	
02	51172	SPL WAS 66308920	WJG	7-22-80	WJG	
A	11565-80	RELEASED CLASS A		7-29-80		Arch
B	14165	REVISED PER ECO	WJG	1-80	WJG	
C	14721	REVISED PER ECO	EE	7/13/81	EE	
D	14820	REVISED PER ECO		11-3-81		
E	14985	FWB IAFD WAS 90446290	EE	11/8/82	EE	

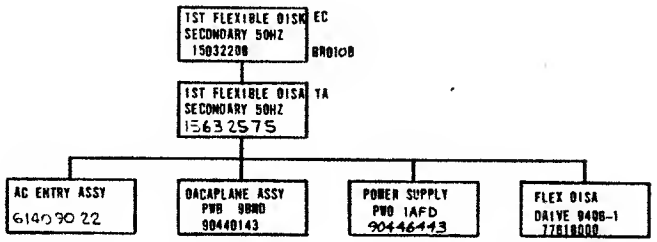

REFERENCE DOCUMENTS

ENGINEERING SPECIFICATION 10042054
SPARE PARTS LIST ..... [illegible]
SCHEMATIC DIAGRAM (IAFD) 90446288
SCHEMATIC DIAGRAM (BMD) 90446141
SCHEMATIC WIRING [illegible]

REFERENCE DRAWING	

COMPONENTS, EXCEPT AS NOTED	TOLERANCE	VALUE	RATING
RES			
CAP			

FIRST USED ON	BR810B	
DWN	R. Neustman	5-12-79
CHKD		
ENGR		10/2/79
MFG		7-10-80
APPR	E. H. Kane	7-15-80

TITLE
GENEALOGY CHART
SECONDARY FLEXIBLE DISK DRIVE 50HZ

CODE IDENT 15920 | C | DRAWING NO 66310614

SCALE | CROSS REF NO | SHEET 1 OF 1

66310614

62949100 G

15632572	PRIMARY	60 HZ
15632573	PRIMARY	50 HZ
15632574	SECONDARY	60 HZ
15632575	SECONDARY	50 HZ

SHEET REVISION STATUS

REVISION RECORD

Z	I	REV	ECO	DESCRIPTION	DRFT	DATE	CHKD	APP
A	A	A	[illegible]	RELEASED CLASS A	[illegible]	[illegible]	[illegible]	[illegible]
B	B	B	14328	CHG F/N 29, ADD F/N 35, IN P/L J	WJG	[illegible]	[illegible]	[illegible]
B	C	C	14376	P/L CHANGE ONLY	EE	1/12/81	EE	
D	D	D	14391	REVISED PER ECO	WH	[illegible]	[illegible]	[illegible]
E	E	E	14454	REVISED PER ECO	EE	1/22/81	EE	
E	F	F	14571	CHG F/N 2 ON PO 72173	WJG	[illegible]	[illegible]	[illegible]
E	G	G	14507	ADD FREQUENCY CONVERSION	DS	[illegible]	[illegible]	[illegible]
E	H	H	14591	ADD F/N 44, 45	DS	[illegible]	[illegible]	[illegible]
J	J	J	14537	ADD F/N 44, CHG F/N 35, 36, 37	WJG	4-27-81	WJG	[illegible]
J	K	K	14663	REVISED PER ECO	EE	[illegible]	EE	[illegible]
J	L	L	14732	P/L CHG ONLY	WJG	[illegible]		
U	M	M	14820	REVISED PER ECO	[illegible]	[illegible]	[illegible]	[illegible]
N	N	N	14853	REVISED PER ECO	[illegible]	[illegible]	[illegible]	[illegible]
N	P	P	14985	P/L CHANGE ONLY	EE	[illegible]	EE	[illegible]
N	R	R	14984	P/L CHANGE ONLY	RH	[illegible]		[illegible]
T	T	T	15289	REVISED PER ECO	MK	[illegible]		[illegible]
U	U	U	[illegible]	REVISED PER ECO	[illegible]	[illegible]	[illegible]	[illegible]
V	V	V	15771	P/L CHANGE ONLY	EE	[illegible]	EE	[illegible]
U	W	W	15812	REVISE F/N 14	WJG	4-5-83	WJG	[illegible]

FREQUENCY CONVERSION PROCEDURE

THIS PROCEDURE IS TO BE USED TO CONVERT THE FDD UNIT FROM 60 HZ OPERATION TO 50 HZ OPERATION, OR VICE VERSA. THIS IS ACCOMPLISHED BY REVERSING THE SMALL-DIAMETER DRIVE PULLEY ON THE SPINDLE-MOTOR SHAFT USING THE FOLLOWING STEPS

1. REMOVE AC POWER
2. DISCONNECT I/O CABLE FROM J1
3. DISCONNECT HARNESSES FROM CONNECTORS ON PRINTED-CIRCUIT BOARD
4. REMOVE TWO SCREWS FROM PRINTED-CIRCUIT BOARD ADJACENT TO CONNECTOR J1.
5. REMOVE PRB BY DETACHING IT FROM THE FOUR PUSH-IN CLIPS
6. REMOVE THE BELT FROM THE SPINDLE-MOTOR PULLEY. (ACCESSIBLE FROM THE UNDER SIDE OF THE UNIT)
7. LOOSEN SETSCREW AND REMOVE PULLEY
8. REVERSE PULLEY AND REPLACE ON THE MOTOR SHAFT
9. POSITION PULLEY ALLOWING TOLERANCE OF 0.096 IN. (2.28 mm) TO 0.010 (0.254 mm) BETWEEN SHOULDER OF MOTOR MOUNTING SCREWS AND PULLEY
10. TIGHTEN DOWN SETSCREW
11. REPLACE BELT
12. TO REPLACE PRINTED-CIRCUIT BOARD, PUSH CLIPS THROUGH PRINTED-CIRCUIT BOARD
13. REPLACE TWO SCREWS ADJACENT TO CONNECTOR J1
14. RECONNECT HARNESS AND I/O CABLE

CAUTION

IT IS IMPORTANT THAT THE NEW OPERATING FREQUENCY BE MARKED ON THE UNIT'S RATING NAMEPLATE. USE A 3/8 INCH x 3/8 INCH DUMMED LABEL. REMARK THE UNIT'S RATING NAMEPLATE WITH THE CORRECT FREQUENCY

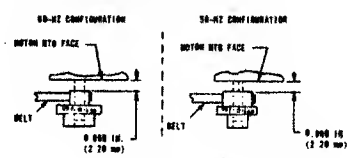

DRIVE-PULLEY REVERSAL

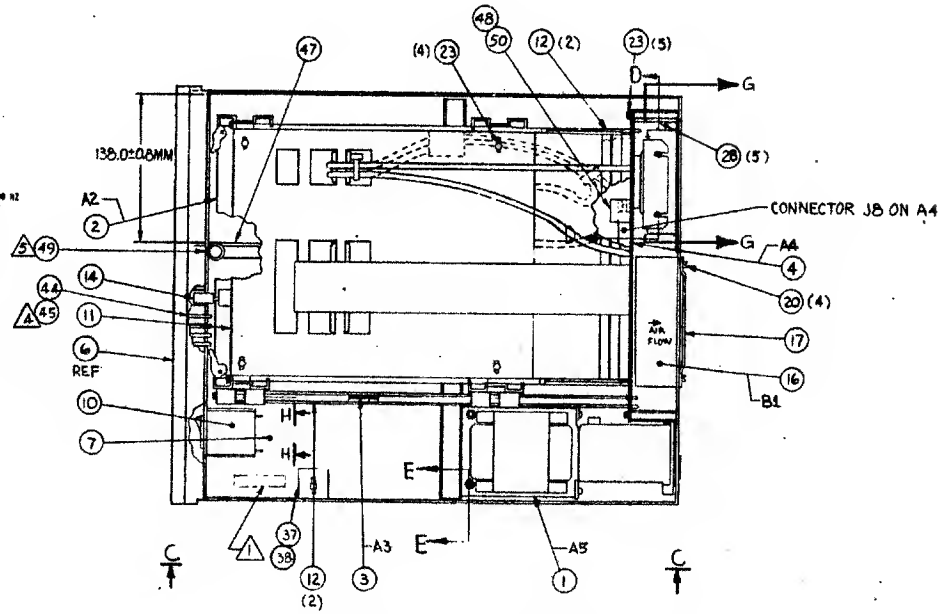

(TOP VIEW SHOWN WITH ITEMS 5,8,9, & 18 REMOVED)

NOTES:

1. MARK "ASSY 15632572" IN AREA SHOWN PER CDC SPEC 10121508.
2. CONNECT SUBASSEMBLIES AS FOLLOWS:
   PLUG A4P1 INTO A1J9
   PLUG A4P2 INTO A1J4
   PLUG A4P3 INTO A1J1
   PLUG A4P4 INTO B1J1
   PLUG A5P3 INTO A4J3
3. MARK NO'S ONLY PER CDC SPEC 10121508, .12 HIGH, WHITE, IN LOCATION APPROX AS SHOWN.
4. OPTIC RODS (F/N 44) TO BE INSTALLED FROM BACK OF FACE PLATE (F/N 6). INSTALL RODS UNTIL THEY ARE FLUSH WITH FRONT OF FACE PLATE, THEN APPLY VERY SMALL AMOUNT (LESS THAN A DROP) OF ADHESIVE (F/N 45) AROUND EACH ROD, ON BACKSIDE OF FACE PLATE. WIPE OFF EXCESS.
5. TIGHTEN SCREW F/N 49 BY HAND, DO NOT USE ANY TOOLS.

METRIC

APL 15632572 THRU 15632575

UNLESS OTHERWISE SPECIFIED DIMENSIONS ARE IN MM
TOLERANCES
DO NOT SCALE DRAWING

FA501A/B

TITLE: PLATO FLEXIBLE DISK (TLA)

CODE IDENT 15920 | D | DRAWING NO 15632572 THRU 15632575

SCALE 1/2 | 15632205/08 | SHEET 1 OF 2

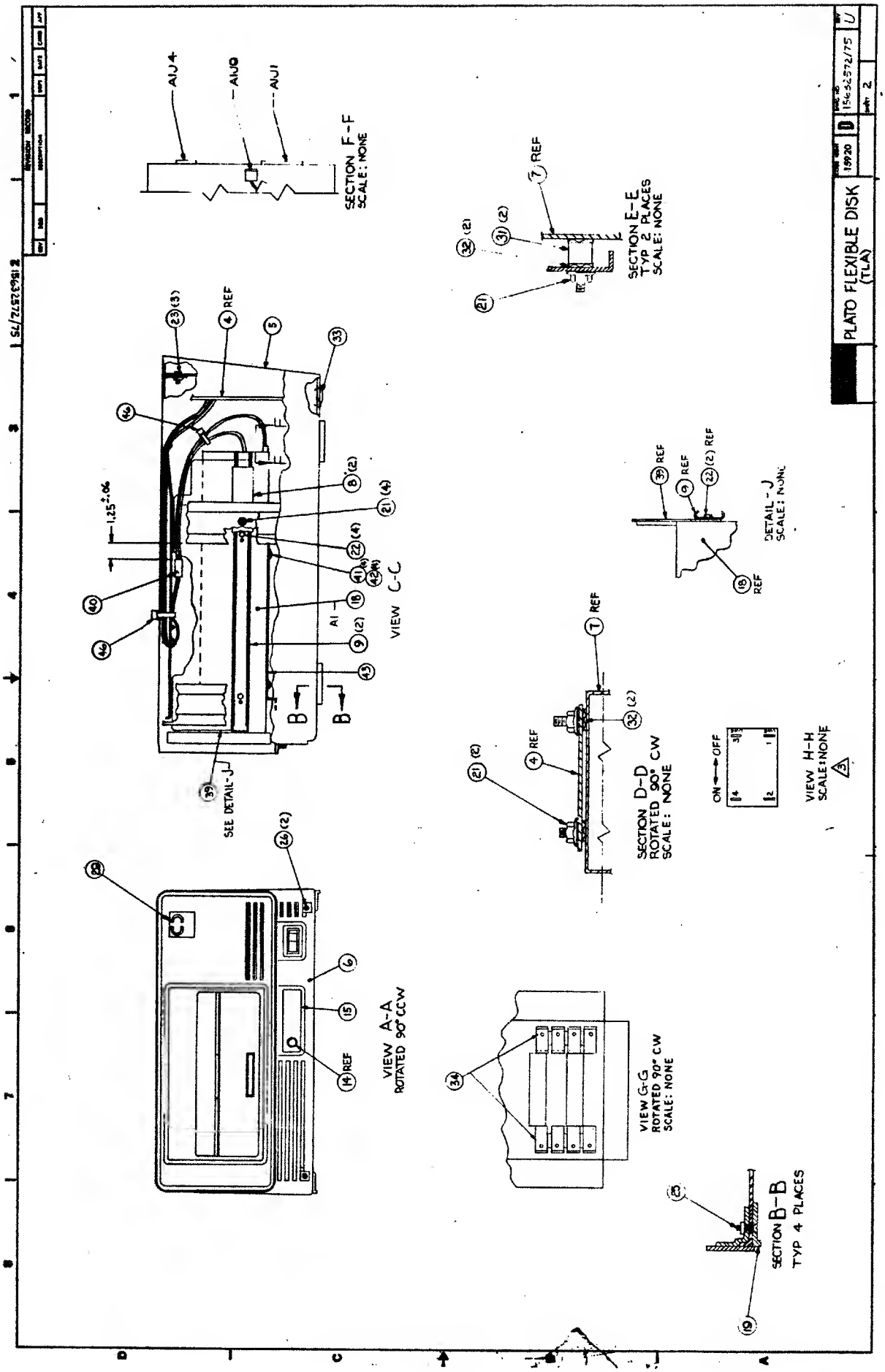
PLATO FLEXIBLE DISK
(TLA)
SECTION F-F
SCALE: NONE
SECTION E-E
TYP 2 PLACES
SCALE: NONE
VIEW C-C
SEE DETAIL-J
DETAIL-J
SCALE: NONE
SECTION D-D
ROTATED 90° CW
SCALE: NONE
VIEW H-H
SCALE: NONE
VIEW A-A
ROTATED 90° CCW
VIEW G-G
ROTATED 90° CW
SCALE: NONE
SECTION B-B
TYP 4 PLACES

BUILD ARC 440

ASSEMBLY PARTS LIST

PRINT DATE	PAGE	FILE CHANGE NO.
03-31-83	1	00015812

DIV.	ASSEMBLY NUMBER	CD	REV.	DWG.	DESCRIPTION	MC	STATUS	STATUS DATE	ENG. RESP.	FILE DATE
0860	15632572	2	W	D	FD 58S, PRIMARY 60HZ (TA)	G	REL	09-03-80	FA501A	03-31-83

T	FIND NO	LI	PART NUMBER	CP	QUANTITY		U/M	PART DESCRIPTION	MC	YLD	ECO. NO. IN	ECO. NO. OUT	S/N	WK IN	WK OUT
	001	01	61489021	5	1		PC	AC ENTRY, FLEX DISK 60HZ	A						
	002	03	90446204	3	1		PC	REPLACED BY 90446570 15771	N		14571	15771		8113	8314
	002	04	90446570	5	1		PC	CD ASSY 98ED-3	N		15771			8314	
	003	03	90446443	5	1		PC	PC CD ASSY 1AFD	A		14985			8209	
	004	01	90446143	1	1		PC	CD ASSY 9BMD BACKPLANE	A						
	005	01	71493032	8	1		PC	COVER METAL AL	P						
	006	01	71493185	4	1		PC	FACE PLATE	P						
	007	01	71493188	8	1		PC	BASE	P						
	008	02	71493295	1	2		PC	TRACK DISK MTG	P		14539			8143	
	009	02	71493296	9	2		PC	SLIDE DISK MTG	P		14539			8143	
	010	01	96837907	3	1		PC	CKT BRKR MAGNETIC 3.0 AMPS	P						
	011	01	71492955	1	1		PC	PANEL CABLE SUPPORT	P						
	012	01	71492966	8	4		PC	GUIDE CARD	P						
	014	02	71492968	4	1		PC	BUTTON SWITCH	P			15812			8321
	014	03	61409606	3	1		PC	SWITCH BUTTON ASSY	N		15812			8321	
	015	01	71493055	9	1		PC	PANEL SWITCH IND	P						
	016	01	51886600	9	1		PC	FAN, 58CFM 1PH 115VAC 50/60HZ	P						
	017	01	94375401	0	1		PC	GUARD, FAN 50/60HZ	P						
	018	01	77n18000	2	1		PC	FLEX DISK DRV, 94006 2-SIDED	V						
	019	02	71493350	4	4		PC	FOOT	P		14853			8147	
	020	01	91976649	3	4		PC	MSCR PAN PHL M4X40MM STL ZP	B						
	021	01	91975724	5	8		PC	NUT, HEX M5 STL ZP	B			15786			8320

BUILD ARC 440

ASSEMBLY PARTS LIST

PRINT DATE	PAGE	FILE CHANGE NO.
03-31-83	2	00015812

DIV.	ASSEMBLY NUMBER	CD	REV.	DWG.	DESCRIPTION	MC	STATUS	STATUS DATE	ENG. RESP.	FILE DATE
0860	15632572	2	W	D	FD 58S, PRIMARY 60HZ (TA)	G	REL	09-03-80	FA501A	03-31-83

T	FIND NO	LI	PART NUMBER	CD	QUANTITY		U/M	PART DESCRIPTION	MC	YLD	ECO. NO. IN	ECO. NO. OUT	S/N	WK IN	WK OUT
	021	02	15165001	7	8		PC	NUT, HEX/FLG-LK M5 STL ZP	B		15786			8320	
	022	01	15164911	8	4		PC	MSCR HEX/W-LK PLN M4X8MM STL	B						
	023	01	15164917	5	4		PC	MSCR HEX/W-LK PLN M5X8MM STL	B			15289			8238
	023	02	15164917	5	12		PC	MSCR HEX/W-LK PLN M5X8MM STL	B		15289			8238	
	024	01	91976758	2	5		PC	MSCR PAN PHL M5X10MM SST PASS	B			15289			8238
	025	01	91976864	8	4		PC	MSCR FLT PHL M5X10MM STL ZP	B						
	026	01	91976652	7	5		PC	MSCR PAN PHL M5X10MM STL ZP	B			15289			8238
	026	02	91976652	7	2		PC	MSCR PAN PHL M5X10MM STL ZP	B		15289			8238	
	027	01	91975706	2	5		PC	WSHR, M5 LOCK SST PASS	B			15289			8238
	028	01	71493078	1	5		PC	STANDOFF HEX METRIC CRS	P						
	029	03	51918435	2	1		PC	EMBLEM, CDC 10	P		14742			8136	
	031	01	93109381	9	2		PC	STOFF,NO.1/4 .250L RD ZINC	P						
	032	01	91975684	1	6		PC	WSHR, M5 EXT/T SST PASS	B			15786			8320
	032	02	91975671	8	6		PC	WSHR, M5 EXT/T SPG-STL ZP	B		15786			8320	
	033	01	93522018	6	1		PC	PLUG,SNAP BUTTON 1 1/4 DIA HO	P						
	034	01	94374900	2		125	PC	STRIP CONTACT	P						
	035	01	09040204	1	8		PC	WSHR, NO.10 DISHED LOCK STL	B			15786			8320
	037	01	62044200	4	1		PC	CLAMP-CABLE ADHESIVE BACK	B						
	038	04	94277400	1	1		PC	STRAP, CBL TIE TYP-1 TO 5/8	B		14539			8143	
	039	02	71493294	4	1		PC	SHIELD	P		14539			8143	
	040	02	94952302	1	1		PC	CLIP CORD TYPE 3 NYLON	P		14742A			8136	
	041	01	10127103	9	4		PC	MSCR PAN PHL 4-40X.312 STL ZP	B		14454			8041	

BUILD ARC 440

ASSEMBLY PARTS LIST

PRINT DATE	PAGE	FILE CHANGE NO
03-31-83	3	00015812

DIV.	ASSEMBLY NUMBER	CD	REV	DWG.	DESCRIPTION	MC	STATUS	STATUS DATE	ENG. RESP	FILE DATE
0860	15632572	2	W	D	FD SBS, PRIMARY 60HZ (TA)	8	REL	09-03-80	FA501A	03-31-83

T	FIND NO	LI	PART NUMBER	CD	MA	QUANTITY		U/M	PART DESCRIPTION	MC	YLD	ECO. NO IN	ECO. NO. OUT	S/N	WK IN	WK OUT
	042	01	10126400	0		4		PC	WSHR, (4) EXT/T LK STL ZP	B		14454			8041	
	043	01	71493269	6		1		PC	SHIELD	P		14454			8041	
	044	01	71493297	7		4		PC	ROD OPTIC	P		14591			8114	
	045	01	94850711	6			001	OZ	SEAL, EASTMAN CLR (910)	B		14591			8114	
	046	01	94277411	8		2		PC	STRAP, CBL TIE TYP-1 TO 1-1/8	B		14539A			8133	
	047	01	71493354	6		1		PC	RAIL SUPPORT PC CD	P		14663			8133	
	048	01	71493360	3		1		PC	GUIDE-PC CONN	P		14663			8133	
	049	01	71493364	5		1		PC	SCREW SHLDR NYLON	P		14663			8133	
	050	01	91976507	3		1		PC	MSCR PAN SLT M3X10MM NYL NAT	B		14663			8133	
									0053 TOTAL LINES							

BUILD ARC 440

ASSEMBLY PARTS LIST

PRINT DATE	PAGE	FILE CHANGE NO.
03-31-83	1	00015012

DIV	ASSEMBLY NUMBER	CD	REV.	DWG.	DESCRIPTION	MK	STATUS	STATUS DATE	ENG. RESP.	FILE DATE
0860	1S632S73	0	W	D	FD S8S, PRIMARY 50HZ (TA)	0	REL	09-03-80	FA501B	03-31-83

T	FIND NO	LI	PART NUMBER	CD	MK	QUANTITY		U/M	PART DESCRIPTION	MK	YLD	ECO. NO. IN	ECO. NO. OUT	*	S/N	WK IN	WK OUT
	001	01	61489022	3		1		PC	AC ENTRY, FLEX DISK 50HZ	A							
	002	03	90446284	3		1		PC	REPLACED BY 90446ST8 1STT1	N		145T1	15T71			8113	8314
	002	04	90446570	S		1		PC	CD ASSY 9BED-3	N		15T71				8314	
	003	03	90446443	S		1		PC	PC CD ASSY 1AFD	A		14985				8209	
	004	01	90446143	1		1		PC	CD ASSY 9BMD BACKPLANE	A							
	005	01	T1493032	8		1		PC	COVER METAL AL	P							
	006	01	T1493185	4		1		PC	FACE PLATE	P							
	007	01	T1493188	8		1		PC	BASE	P							
	008	02	T1493295	1		2		PC	TRACK DISK MTG	P		14539				8143	
	009	02	T1493296	9		2		PC	SLIDE DISK MTG	P		14539				8143	
	010	01	9683790T	3		1		PC	CKT BRKR MAGNETIC 3.0 AMPS	P							
	011	01	714929SS	1		1		PC	PANEL CABLE SUPPORT	P							
	012	01	T1492966	8		4		PC	GUIDE CARD	P							
	014	02	T1492968	4		1		PC	BUTTON SWITCH	P			15812				8321
	014	03	61489606	3		1		PC	SWITCH BUTTON ASSY	N		15812				8321	
	015	01	714930SS	9		1		PC	PANEL SWITCH IND	P							
	016	01	51886600	9		1		PC	FAN, 50CFM 1PH 115VAC 50/60HZ	P							
	01T	01	943T54$_{01}$	0		1		PC	GUARD, FAN $S_0/6_0$HZ	P							
	018	01	T761$8_{000}$	2		1		PC	FLEX DISK DRV, 94_06 2-SIDED	V							
	019	02	T_{14933S_0}	4		4		PC	FDDT	P		14853				8_{147}	
	020	01	91976649	3		4		PC	MSCR PAN PHL M4X40MM STL ZP	B							
	021	01	91975724	5		8		PC	NUT, HEX M5 STL ZP	B			15T86				8320

BUILD ARC 440

ASSEMBLY PARTS LIST

PRINT DATE	PAGE	FILE CHANGE NO.
03-31-83	2	00015012

DIV	ASSEMBLY NUMBER	CD	REV	DWG	DESCRIPTION	MK	STATUS	STATUS DATE	ENG. RESP.	FILE DATE
0860	1S632S73	0	W	D	FD S8S, PRIMARY 50HZ (TA)	0	REL	09-03-80	FA501B	03-31-83

T	FIND NO	LI	PART NUMBER	CD	MK	QUANTITY		U/M	PART DESCRIPTION	MK	YLD	ECO. NO. IN	ECO. NO. OUT	*	S/N	WK IN	WK OUT
	021	02	1S165001	T		8		PC	NUT, HEX/FLG-LK M5 STL ZP	B		15T86				8320	
	022	01	1S164911	8		4		PC	MSCR HEX/W-LK PL_N M4X8MM STL	B							
	023	01	1S164917	S		4		PC	MSCR HEX/W-LK PLN M5X8MM STL	B			1S289				8238
	023	02	1S164917	S		12		PC	MSCR HEX/W-LK PLN M5X8MM STL	B		1S289				8238	
	024	01	91976758	2		5		PC	MSCR PAN PHL M5X_{10}MM SST PASS	B			15289				8238
	025	01	91976864	8		4		PC	MSCR FLT PHL M5X10MM STL ZP	B							
	026	01	91976652	T		5		PC	MSCR PAN PHL M5X10MM STL ZP	B			15289				8238
	026	02	91976652	7		2		PC	MSCR PAN PHL M5X10MM STL ZP	B		1S289				8238	
	02T	01	91975706	2		5		PC	WSHR, M5 LOCK SST PASS	B			15289				8238
	028	01	71493$_0$T8	1		5		PC	STANDOFF HEX METRIC CRS	P							
	029	03	51918435	2		1		PC	EMBLEM, CDC ID	P		14742				8136	
	031	01	$93_{10}9381$	9		2		PC	STOFF,ND.1/4 .25$_0$L RD ZINC	P							
	032	01	91975684	1		6		PC	WSHR, M5 EXT/T SST PASS	B			15786				832_0
	032	02	91975671	8		6		PC	WSHR, M5 EXT/T SPG-STL ZP	B		15T86				8320	
	033	01	$93522_{01}8$	6		1		PC	PLUG,SNAP BUTTON 1 1/4 DIA HD	P							
	034	01	943749_{00}	2			125	PC	STRIP CONTACT	P							
	035	01	09040204	1		8		PC	WSHR, ND.10 DISHED LOCK STL	B			15T86				8320
	037	01	62_0442_{00}	4		1		PC	CLAMP-CABLE ADHESIVE BACK	B							
	038	04	94277400	1		1		PC	STRAP, CBL TIE TYP-1 TO 5/8	B		14539				8143	
	039	02	T1493294	4		1		PC	SHIELD	P		14539				8_{143}	
	040	02	94952302	1		1		PC	CLIP CORD TYPE 3 NYLON	P		14742A				8136	
	041	01	10127103	9		4		PC	MSCR PAN PHL 4-40X.312 STL ZP	B		14454				8041	

BUILD ARC 440

ASSEMBLY PARTS LIST

PRINT DATE	PAGE	FILE CHANGE NO
03-31-83	3	00015812

DIV	ASSEMBLY NUMBER	CD	REV.	DWG.	DESCRIPTION	MC	STATUS	STATUS DATE	DWG DESP	FILE DATE
0860	15632573	C	W	0	FD SBS, PRIMARY 50HZ (TA)	6	REL	09-03-80	FA5018	03-31-83

T	FIND NO	LI	PART NUMBER	CD	M	QUANTITY		U/M	PART DESCRIPTION	MC	YLD	ECO. NO. IN	ECO. NO. OUT	S/N	WK IN	WK OUT
	042	01	10126400	0		4		PC	WSHR, (4) EXT/T LK STL ZP	B		14454			8041	
	043	01	71493269	6		1		PC	SHIELD	P		14454			8041	
	044	01	71493297	7		4		PC	ROD OPTIC	P		14591			8114	
	045	01	94850711	6			001	OZ	SEAL, EASTMAN CLR (910)	B		14591			8114	
	046	01	94277411	8		2		PC	STRAP, CBL TIE TYP-1 TO 1-1/8	B		14539A			8133	
	047	01	71493354	6		1		PC	RAIL SUPPORT PC CO	P		14663			8133	
	048	01	71493360	3		1		PC	GUIDE-PC CONN	P		14663			8133	
	049	01	71493364	5		1		PC	SCREW SHLDR NYLON	P		14663			8133	
	050	01	91976507	3		1		PC	MSCR PAN SLT M3X10MM NYL NAT	B		14663			8133	
									0053 TOTAL LINES							

BUILD ARC 440

ASSEMBLY PARTS LIST

PRINT DATE	PAGE	FILE CHANGE NO
03-31-83	1	00015812

DIV.	ASSEMBLY NUMBER	CD	REV.	DWG.	DESCRIPTION	MC	STATUS	STATUS DATE	ENG. RESP.	FILE DATE
0860	15632574	8	W	D	FD 88S, SECONDARY 60HZ (7A)	0	REL	09-03-80	BR810A	03-31-83

T	FIND NO	LI	PART NUMBER	CD	IN	QUANTITY		U/M	PART DESCRIPTION	MC	YLD	ECO. NO. IN	ECO. NO. OUT	S/N	WK IN	WK OUT
	001	01	61409021	5		1		PC	AC ENTRY, FLEX DISK 60HZ	A						
	003	03	90446443	5		1		PC	PC CD ASSY 1AFD	A		14985			8209	
	004	01	90446143	1		1		PC	CD ASSY 98WD BACKPLANE	A						
	005	01	71493032	8		1		PC	COVER METAL AL	P						
	006	01	71493185	4		1		PC	FACE PLATE	P						
	007	01	71493188	8		1		PC	BASE	P						
	008	02	71493295	1		2		PC	TRACK DISK MTG	P		14539			8143	
	009	02	71493296	9		2		PC	SLIDE DISK MTG	P		14539			8143	
	010	01	96837907	3		1		PC	CKT BRKR MAGNETIC 3.0 AMPS	P						
	011	01	71492955	1		1		PC	PANEL CABLE SUPPORT	P						
	012	02	71492966	8		4		PC	GUIDE CARD	P		14984			8204	
	014	01	71492968	4		1		PC	BUTTON SWITCH	P			15012			8321
	015	01	71493054	2		1		PC	PANEL SWITCH INDICATOR	P						
	016	01	51886600	9		1		PC	FAN, 50CFM 1PH 115VAC 50/60HZ	P						
	017	01	94375401	0		1		PC	GUARD, FAN 50/60HZ	P						
	018	01	77618000	2		1		PC	FLEX DISK DRV, 9406 2-SIDED	V						
	019	02	7149335	4		4		PC	FOOT	P		14853			8147	
	020	01	91976649	3		4		PC	MSCR PAN PHL M4X40MM STL ZP	B						
	021	01	91975724	5		8		PC	NUT, HEX M5 STL ZP	B			15786			8320
	021	02	15165001	7		8		PC	NUT, HEX/FLG-LK M5 STL ZP	B		15786			8320	
	022	01	151649 11	8		4		PC	MSCR HEX/W-LK PLN M4X8MM STL	B						

BUILD ARC 440

ASSEMBLY PARTS LIST

PRINT DATE	PAGE	FILE CHANGE NO
03-31-83	2	00015812

DIV	ASSEMBLY NUMBER	CD	REV.	DWG.	DESCRIPTION	MC	STATUS	STATUS DATE	ENG. RESP	FILE DATE
0860	15632574	8	W	D	FD 88S, SECONDARY 60HZ (7A)	0	REL	09-03-80	BR810A	03-31-83

T	FIND NO	LI	PART NUMBER	CD	IN	QUANTITY		U/M	PART DESCRIPTION	MC	YLD	ECO. NO. IN	ECO. NO. OUT	S/N	WK IN	WK OUT
	023	01	15164917	5		4		PC	MSCR HEX/W-LK PLN M5X8MM STL	B			15289			8238
	023	02	15164917	5		12		PC	MSCR HEX/W-LK PLN M5X8MM STL	B		15289			8238	
	024	01	91976758	2		5		PC	MSCR PAN PHL M5X10MM SST PASS	B			15289			8238
	025	01	91976864	8		4		PC	MSCR FLT PHL M5X10MM STL ZP	B						
	026	01	91976652	7		5		PC	MSCR PAN PHL M5X10MM STL ZP	B			15289			8238
	026	02	91976652	7		2		PC	MSCR PAN PHL M5X10MM STL ZP	B		15289			8238	
	027	01	91975706	2		5		PC	WSHR, M5 LOCK SST PASS	B			15289			8238
	028	01	71493078	1		4		PC	STANDOFF HEX METRIC CRS	P						
	029	03	51918435	2		1		PC	EMBLEM, CDC ID	P		14742			8136	
	031	01	931093 81	9		2		PC	STOFF,NO.1/4 .250L RD ZINC	P						
	032	01	91975684	1		6		PC	WSHR, MS EXT/T SST PASS	B			15786			8320
	032	02	91975671	8		6		PC	WSHR, MS EXT/T SPG-STL ZP	B		15786			8320	
	033	01	935220 18	6		1		PC	PLUG,SNAP BUTTON 1 1/4 DIA HO	P						
	034	01	94374900	2			12S	PC	STRIP CONTACT	P						
	035	01	09040204	1		8		PC	WSHR, NO.10 DISHED LOCK STL	B			15786			8320
	037	01	62044200	4		1		PC	CLAMP-CABLE ADHESIVE BACK	B						
	038	04	94277400	1		1		PC	STRAP, CBL TIE TYP-1 TO S/R	B		14539			8143	
	039	02	71493294	4		1		PC	SHIELD	P		14539			8143	
	040	82	94952302	1		1		PC	CLIP CORD TYPE 3 NYLON	P		14742A			8136	
	046	01	94277411	8		2		PC	STRAP, CBL TIE TYP-1 TO 1-1/8	B		14539A			8133	

BUILD ARC 440

ASSEMBLY PARTS LIST

PRINT DATE	PAGE	FILE CHANGE NO
03-31-83	3	00015812

DIV.	ASSEMBLY NUMBER	CD	REV.	DWG.	DESCRIPTION	MC	STATUS	STATUS DATE	ENG. RESP	FILE DATE
0060	15632574	8	W	D	FD SBS, SECONDARY 60HZ (TA)	0	REL	09-03-80	BR810A	03-31-83

T	FIND NO	LI	PART NUMBER	CD	IN	QUANTITY		U/M	PART DESCRIPTION	MC	YLD	ECO. NO. IN	ECO. NO. OUT	S/N	WK IN	WK OUT
									0041 TOTAL LYNES							

BUILD ARC 440

ASSEMBLY PARTS LIST

PRINT DATE	PAGE	FILE CHANGE NO.
03-31-83	1	00015012

DIV.	ASSEMBLY NUMBER	CD	REV.	DWG.	DESCRIPTION	MC	STATUS	STATUS DATE	DWG. RESP	FILE DATE
0060	15632575	5	W	D	FD 585, SECONDARY 50HZ (TA)	0	REL	09-03-80	BR0108	03-31-83

TYPE	FIND NO	LI	PART NUMBER	CD	MC	QUANTITY		U/M	PART DESCRIPTION	MC	TLD	ECO. NO. IN	ECO. NO. OUT	S/N	WK IN	WK OUT
	001	01	61409022	3		1		PC	AC ENTRY, FLEX DISK 50HZ	A						
	003	03	90446443	5		1		PC	PC CD ASSY 1AFD	A		14985			0209	
	004	01	90446143	1		1		PC	CD ASSY 90HD BACKPLANE	A						
	005	01	71493032	0		1		PC	COVER METAL AL	P						
	006	01	71493105	4		1		PC	FACE PLATE	P						
	007	01	71493100	0		1		PC	BASE	P						
	008	02	71493295	1		2		PC	TRACK DISK MT0	P		14539			0143	
	009	02	71493296	9		2		PC	SLIDE DISK MT0	P		14539			0143	
	010	01	90837907	3		1		PC	CKT BRKR MAGNETIC 3.0 AMPS	P						
	011	01	71492955	1		1		PC	PANEL CABLE SUPPORT	P						
	012	02	71492966	0		4		PC	GUIDE CARD	P		14984			0204	
	014	01	71492968	4		1		PC	BUTTON SWITCH	P			15012			0321
	015	01	71493054	2		1		PC	PANEL SWITCH INDICATOR	P						
	016	01	51886600	9		1		PC	FAN, 50CFM 1PH 115VAC 50/60HZ	P						
	017	01	94375401	0		1		PC	GUARD, FAN 50/60HZ	P						
	018	01	77618000	2		1		PC	FLEX DISK DRV, 9406 2-SIDED	V						
	019	02	7149335	4		4		PC	FOOT	P		14853			0147	
	020	01	91976649	3		4		PC	MSCR PAN PHL M4X40MM STL ZP	B						
	021	01	91975724	5		8		PC	NUT, HEX M5 STL ZP	B			15786			0320
	021	02	15165001	7		8		PC	NUT, HEX/FLG-LK M5 STL ZP	B		15786			0320	
	022	01	15164911	8		4		PC	MSCR HEX/W-LK PLN M4X8MM STL	B						

BUILD ARC 440

ASSEMBLY PARTS LIST

PRINT DATE	PAGE	FILE CHANGE NO
03-31-83	2	00015012

DIV.	ASSEMBLY NUMBER	CD	REV.	DWG.	DESCRIPTION	MC	STATUS	STATUS DATE	DWG. RESP.	FILE DATE
0060	15632575	5	W	D	FD 585, SECONDARY 50HZ (TA)	0	REL	09-03-80	BR0108	03-31-83

TYPE	FIND NO	LI	PART NUMBER	CD	MC	QUANTITY		U/M	PART DESCRIPTION	MC	TLD	ECO. NO. IN	ECO. NO. OUT	S/N	WK IN	WK OUT
	023	01	15164917	5		4		PC	MSCR HEX/W-LK PLN M5X8MM STL	B			15289			0238
	023	02	15164917	5		12		PC	MSCR HEX/W-LK PLN M5X8MM STL	B		15289			0238	
	024	01	91976758	2		5		PC	MSCR PAN PHL M5X10MM SST PASS	B			15289			0238
	025	01	91976864	8		4		PC	MSCR FLT PHL M5X10MM STL ZP	B						
	026	01	91976652	7		5		PC	MSCR PAN PHL M5X10MM STL ZP	B			15289			0238
	026	02	91976652	7		2		PC	MSCR PAN PHL M5X10MM STL ZP	B		15289			0238	
	027	01	91975706	2		5		PC	WSHR, M5 LOCK SST PASS	B			15289			0238
	028	01	71493078	1		5		PC	STANDOFF HEX METRIC CRS	P						
	029	03	51918435	2		1		PC	EMBLEM, CDC 10	P		14742			0136	
	031	01	931093381	9		2		PC	STOFF,NO.1/4 .25L RD ZINC	P						
	032	01	91975684	1		6		PC	WSHR, M5 EXT/T SST PASS	B			15786			0320
	032	02	91975671	8		6		PC	WSHR, M5 EXT/T SPB-STL ZP	B		15786			0320	
	033	01	93522018	6		1		PC	PLUG,SNAP BUTTON 1 1/4 DIA HO	P						
	034	01	94374900	2			125	PC	STRIP CONTACT	P						
	035	01	09040204	1		8		PC	WSHR, NO.10 DISHED LOCK STL	B			15786			0320
	037	01	62044200	4		1		PC	CLAMP-CABLE ADHESIVE BACK	B						
	038	04	94277400	1		1		PC	STRAP, CBL TIE TYP-1 TO 5/8	B		14539			0143	
	039	02	71493294	4		1		PC	SHIELD	P		14539			0143	
	040	02	94952302	1		1		PC	CLIP CORD TYPE 3 NYLON	P		14742A			0136	
	040	01	94277411	8		2		PC	STRAP, CBL TIE TYP-1 TO 1-1/8	B		14839A			0133	

BUILD ARC 440

ASSEMBLY PARTS LIST

PRINT DATE	PAGE	FILE CHANGE NO.
03-31-03	3	00015012

DIV	ASSEMBLY NUMBER	CD	REV.	DWG.	DESCRIPTION	SIC	STATUS	STATUS DATE	DISP.	FILE DATE
0860	15632575	5	W	D	FD 585, SECONDARY 50HZ (TA)	0	REL	09-03-80	DR010D	03-31-03

T	FIND NO.	LI	PART NUMBER	CD	IN	QUANTITY		W/S	PART DESCRIPTION	SIC	VLD	SCD. NO. IN	SCD. NO. OUT	S/N	WK IN	WK OUT
									0041 TOTAL LINES							

15632982	PRIMARY	50 HZ
15632983,	PRIMARY	60 HZ

SHEET REVISION STATUS				REVISION RECORD					
			REV	ECO	DESCRIPTION	DRFT	DATE	CHKD	APP
			A	13920-68	RELEASED CLASS 2		6-4-81		
		A	B	14985	P/L CHANGE ONLY	EB	7/8/82	E.B.	
		B	C	15289	REVISED PER ECO				
		C	D	15469	REVISED P/L ONLY	DC			
		D	E	15786	REVISED PER ECO	MO	1-8-83		
		E	F	15771	P/L CHANGE ONLY	EB	5/28/83	E.B.	
		F	G	15812	REVISE F/N 14	WJG	6-5-83	W.J.G.	

FREQUENCY CONVERSION PROCEDURE

THIS PROCEDURE IS TO BE USED TO CONVERT THE FBU UNIT FROM 60 HZ OPERATION TO 50 HZ OPERATION OR VICE VERSA. THIS IS ACCOMPLISHED BY REVERSING THE DUAL-DIAMETER REVERSIBLE PULLEY ON THE SPINDLE-MOTOR SHAFT USING THE FOLLOWING STEPS

1. REMOVE AC POWER
2. DISCONNECT I/O CABLE FROM J1
3. DISCONNECT HARNESSES FROM CONNECTORS ON PRINTED-CIRCUIT BOARD
4. REMOVE TWO SCREWS FROM PRINTED-CIRCUIT BOARD ADJACENT TO CONNECTOR J1
5. REMOVE PBA BY DETACHING IT FROM THE FOUR PUSH-IN CLIPS
6. REMOVE THE BELT FROM THE SPINDLE-MOTOR PULLEY (ACCESSIBLE FROM THE UNDER SIDE OF THE UNIT)
7. LOOSEN SETSCREW AND REMOVE PULLEY
8. REVERSE PULLEY AND REPLACE ON THE MOTOR SHAFT
9. POSITION PULLEY ALLOWING TOLERANCE OF 0.000 IN (2.29 mm) TO 0.10 (0.254 mm) BETWEEN SHOULDER OF MOTOR MOUNTING SCREWS AND PULLEY
10. TIGHTEN DOWN SETSCREW
11. REPLACE BELT
12. TO REPLACE PRINTED-CIRCUIT BOARD: PUSH CLIPS THROUGH PRINTED-CIRCUIT BOARD
13. REPLACE TWO SCREWS ADJACENT TO CONNECTOR J1
14. RECONNECT HARNESS AND I/O CABLE

CAUTION

IT IS IMPORTANT THAT THE NEW OPERATING FREQUENCY BE MARKED ON THE UNIT'S RATING NAMEPLATE. USE A 3.0 INCH x 3.0 INCH CURVED LABEL. REMARK THE UNIT'S RATING NAMEPLATE WITH THE CORRECT FREQUENCY

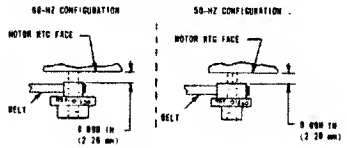

DRIVE-PULLEY REVERSAL

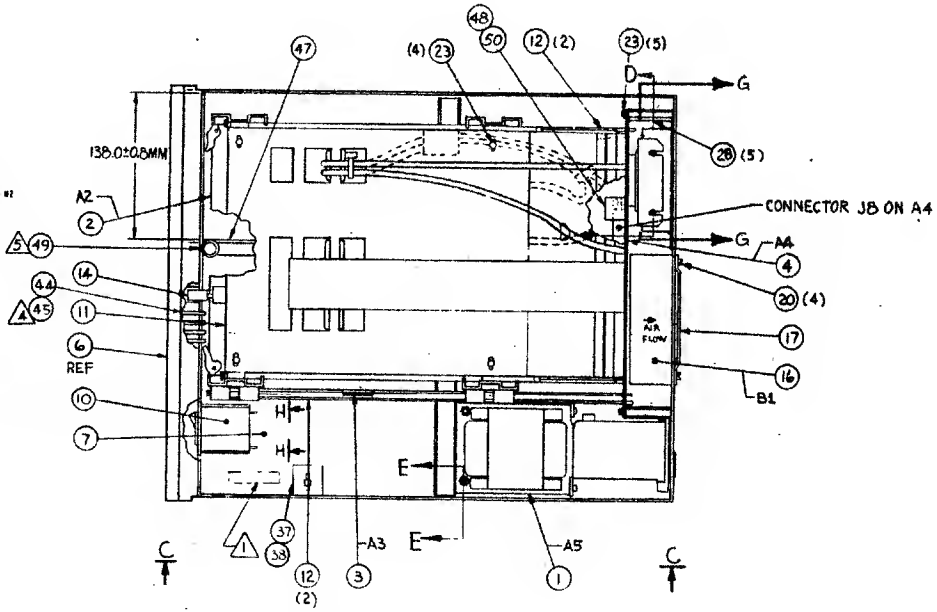

(TOP VIEW SHOWN WITH ITEMS 5,8,9, & 18 REMOVED)

NOTES:

1. MARK "ASSY 15632982X" IN AREA SHOWN PER CDC SPEC 10121508.
2. CONNECT SUBASSEMBLIES AS FOLLOWS:
   PLUG A4P1 INTO A1J9
   PLUG A4P2 INTO A1J4
   PLUG A4P3 INTO A1J1
   PLUG A4P4 INTO B1J1
   PLUG A5P3 INTO A4J3
3. MARK NO'S ONLY PER CDC SPEC 10121508, .12 HIGH, WHITE, IN LOCATION APPROX AS SHOWN.
4. OPTIC RODS (F/N 44) TO BE INSTALLED FROM BACK OF FACE PLATE (F/N 4). INSTALL RODS UNTIL THEY ARE FLUSH WITH FRONT OF FACE PLATE, THEN APPLY VERY SMALL AMOUNT (LESS THAN A DROP) OF ADHESIVE (F/N 45) AROUND EACH ROD, ON BACKSIDE OF FACE PLATE. WIPE OFF EXCESS.
5. TIGHTEN SCREW F/N 49 BY HAND, DO NOT USE ANY TOOLS.

METRIC

APL 15632982 THRU 15632983

DO NOT SCALE DRAWING

FA501C/D

TITLE: CD110 FLEXIBLE DISK (TLA)

CODE IDENT 15920 | D | DRAWING NO 15632982 THRU 15632983

SCALE 1/2 | NEXT ASSY 15632981 15632983 | SHEET 1 OF 2

6294910 0 J

7-38.5

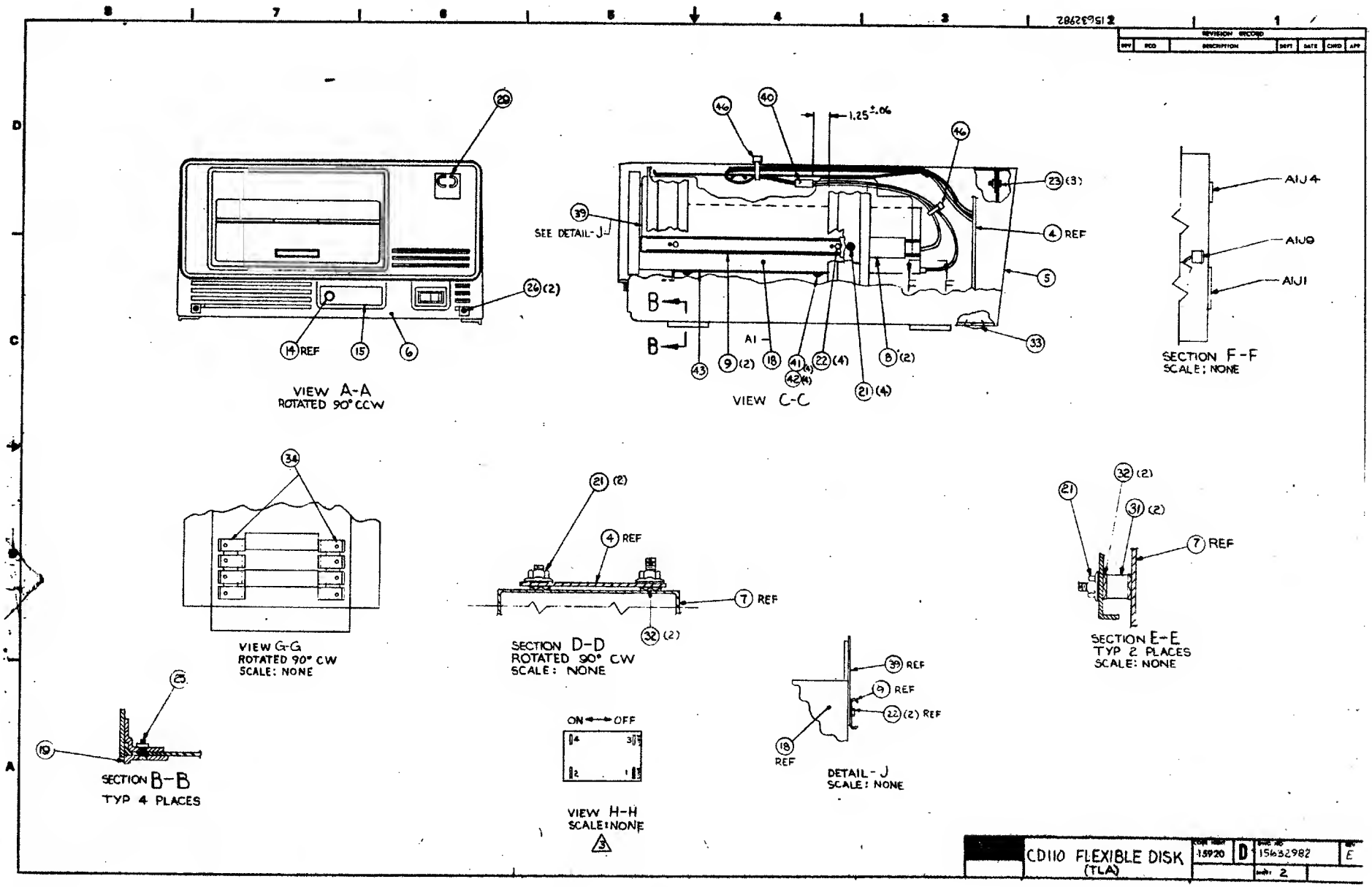
REVISION RECORD
REV ECO DESCRIPTION DEPT DATE CHKD APP
VIEW A-A
ROTATED 90° CCW
14 REF
15
6
20
24 (2)
VIEW C-C
SEE DETAIL-J
39
40
46
1.25±.06
23 (3)
4 REF
5
33
B
A1
43
9 (2)
18
41 (4)
42 (4)
22 (4)
21 (4)
8 (2)
SECTION F-F
SCALE: NONE
AIU4
AIU9
AIU1
VIEW G-G
ROTATED 90° CW
SCALE: NONE
34
SECTION D-D
ROTATED 90° CW
SCALE: NONE
21 (2)
4 REF
7 REF
32 (2)
SECTION E-E
TYP 2 PLACES
SCALE: NONE
32 (2)
31 (2)
7 REF
SECTION B-B
TYP 4 PLACES
25
19
VIEW H-H
SCALE: NONE
ON OFF
DETAIL-J
SCALE: NONE
39 REF
19 REF
22 (2) REF
18 REF
CD110 FLEXIBLE DISK
(TLA)
D
15632982
E
2

BUILD ARC 440

ASSEMBLY PARTS LIST

PRINT DATE	PAGE	FILE CHANGE NO
03-31-83	1	00015812

DIV	ASSEMBLY NUMBER	CD	REV.	DWG.	DESCRIPTION	MC	STATUS	STATUS DATE	DWG. RESP.	FILE DATE
0860	15632982	3	G	D	FDD, C0110 PRIMARY 50HZ (TA)	G	REL	12-18-81	FA501D	03-31-83

TYPE	FIND NO	LI	PART NUMBER	CD	MK	QUANTITY		U/M	PART DESCRIPTION	MC	YLD	ECO. NO. IN	ECO. NO. OUT	S/N	WK IN	WK OUT
	001	01	61409022	3		1		PC	AC ENTRY, FLEX DISK 50HZ	A						
	002	01	90446396	5		1		PC	REPLACED BY 90446571 15771	S			15771			8314
	002	02	90446571	3		1		PC	CD ASSY CONT MOD W/FULL MEM	S		15771			8314	
	003	02	90446443	5		1		PC	PC CO ASSY 1AFO	A		14985			8209	
	004	01	90446143	1		1		PC	CD ASSY 98HD BACKPLANE	A						
	005	01	71493032	8		1		PC	COVER METAL AL	P						
	006	01	71493185	4		1		PC	FACE PLATE	P						
	007	01	71493188	8		1		PC	BASE	P						
	008	01	71493295	1		2		PC	TRACK D15K MTG	P						
	009	01	71493296	9		2		PC	SLIDE D15K MTG	P						
	010	01	96837907	3		1		PC	CK7 BRKR MAGNETIC 3.0 AMPS	P						
	011	01	71492955	1		1		PC	PANEL CABLE SUPPORT	P						
	012	01	71492966	8		4		PC	GUIDE CARD	P						
	014	02	71492968	4		1		PC	BUTTON SWITCH	P			15812			8321
	014	03	61409606	3		1		PC	SWITCH BUTTON ASSY	N		15812			8321	
	015	01	71493055	9		1		PC	PANEL SWITCH IND	P						
	016	01	51886600	9		1		PC	FAN, 50CFM 1PH 115VAC 50/60HZ	P						
	017	01	94375401	0		1		PC	GUARD, FAN 50/60HZ	P						
	018	01	77618000	2		1		PC	FLEX D15K DRV, 9406 2-SIDED	V						
	019	01	7149350	4		4		PC	FOOT	P						
	020	01	91976649	3		4		PC	MSCR PAN PHL M4X40MM STL ZP	B						
	021	01	91975724	5		8		PC	NUT, HEX M5 STL ZP	B			15786			8320

BUILD ARC 440

ASSEMBLY PARTS LIST

PRINT DATE	PAGE	FILE CHANGE NO.
03-31-83	2	00015812

DIV	ASSEMBLY NUMBER	CD	REV.	DWG.	DESCRIPTION	MC	STATUS	STATUS DATE	DWG. RESP	FILE DATE
0860	15632982	3	G	D	FDD, C0110 PRIMARY 50HZ (TA)	G	REL	12-18-81	FA501D	03-31-83

TYPE	FIND NO	LI	PART NUMBER	CD	MK	QUANTITY		U/M	PART DESCRIPTION	MC	YLD	ECO. NO. IN	ECO. NO. OUT	S/N	WK IN	WK OUT
	021	02	15165001	7		8		PC	NUT, HEX/FLG-LK M5 STL ZP	B		15786			8320	
	022	01	15164911	8		4		PC	MSCR HEX/W-LK PLN M4X8MM STL	B						
	023	01	15164917	5		4		PC	MSCR HEX/W-LK PLN M5X8MM STL	B			15289			8238
	023	02	15164917	5		12		PC	MSCR HEX/W-LK PLN M5X8MM STL	B		15289			8238	
	024	01	91976758	2		5		PC	MSCR PAN PHL M5X10MM SST PASS	B			15289			8238
	025	01	91976864	8		4		PC	MSCR FLT PHL M5X10MM STL ZP	B						
	026	01	91976652	7		5		PC	MSCR PAN PHL M5X10MM STL ZP	B			15289			8238
	026	02	91976652	7		2		PC	MSCR PAN PHL M5X10MM STL ZP	B		15289			8238	
	027	01	91975706	2		5		PC	WSHR, M5 LOCK SST PASS	B			15289			8238
	028	01	7149378	1		5		PC	STANDOFF HEX METRIC CRS	P						
	029	01	51918435	2		1		PC	EMBLEM, COC 10	P						
	031	01	9310938 1	9		2		PC	STOFF,NO.1/4 .250L RO ZINC	P						
	032	01	91975684	1		6		PC	WSHR, M5 EXT/T SST PASS	B			15786			8320
	032	02	91975671	8		6		PC	WSHR, M5 EXT/T SPG-STL ZP	B		15786			8320	
	033	01	93522018	6		1		PC	PLUG,SNAP BUTTON 1 1/4 DIA HO	P						
	034	01	9437490 0	2			125	PC	STRIP CONTACT	P						
	035	01	09040204	1		8		PC	WSHR, NO.10 DISHED LOCK STL	B			15786			8320
	036	01	5180570 0	5		4		PC	BUMPER SELF STICKING	P			15669			8301
	037	01	62044200	4		1		PC	CLAMP-CABLE ADHESIVE BACK	B						
	038	01	94277400	1		1		PC	STRAP, CBL TIE TYP-1 TO 5/8	B						
	039	01	71493294	4		1		PC	SHIELD	P						
	040	01	94952302	1		1		PC	CLIP CORD TYPE 3 NYLON	P						

BUILD ARC 440

ASSEMBLY PARTS LIST

PRINT DATE	PAGE	FILE CHANGE NO.
03-31-83	3	00015812

DIV.	ASSEMBLY NUMBER	CD	DIV.	DWG.	DESCRIPTION	MC	STATUS	STATUS DATE	DWG. RESP.	FILE DATE
0060	15632982	3	6	D	FDD, CD110 PRIMARY 50HZ (TA)	6	REL	12-18-81	FA501D	03-31-83

T	FIND NO	LI	PART NUMBER	CD	MA	QUANTITY		U/M	PART DESCRIPTION	MC	YSD	ECO. NO. IN	ECO. NO. OUT	S/N	WE IN	WE OUT
	041	01	10127103	9		4		PC	MSCR PAN PHL 4-40X.312 STL ZP	B						
	042	01	10126400	0		4		PC	WSHR, (4) EXT/T LK STL ZP	B						
	043	01	71493269	6		1		PC	SHIELD	P						
	044	01	71493297	7		4		PC	ROD OPTIC	P						
	045	01	94850711	6			001	OZ	SEAL, EASTMAN CLR (910)	B						
	046	01	94277411	8		2		PC	STRAP, CBL TIE TYP-1 TO 1-1/8	B						
	047	01	71493354	6		1		PC	RAIL SUPPORT PC CD	P						
	048	01	71493360	3		1		PC	GUIDE-PC CONN	P						
	049	01	71493364	5		1		PC	SCREW SHLDR NYLON	P						
	050	01	91976507	3		1		PC	MSCR PAN SLT M3X10MM NYL NAT	B						
									0054 TOTAL LINES							

BUILD ARC 440

ASSEMBLY PARTS LIST

PRINT DATE	PAGE	FILE CHANGE NO.
03-31-83	1	00015812

DIV	ASSEMBLY NUMBER	CD	REV.	DWG.	DESCRIPTION	MC	STATUS	STATUS DATE	ENG. RESP	FILE DATE
0860	15632983	1	0	D	FDD, CD110 PRIMARY 60HZ (TA)	0	REL	12-10-81	FA501C	03-31-83

T	FIND NO	LI	PART NUMBER	CD	M	QUANTITY		U/M	PART DESCRIPTION	MC	YLD	ECO. NO. IN	ECO. NO. OUT	S/N	WK IN	WK OUT
	001	01	61409021	5		1		PC	AC ENTRY, FLEX DISK 60HZ	A						
	002	01	90446396	5		1		PC	REPLACED BY 90446571 15TT1	S			15TT1			0314
	002	02	90446571	3		1		PC	CD ASSY CONT MOD W/FULL MEM	S		15TT1			0314	
	003	01	90446290	0		1		PC	REPLACED BY 90446443 14905	A			14905			0209
	003	02	90446443	5		1		PC	PC CD ASSY 1AFD	A		14905			0209	
	004	01	90446143	1		1		PC	CD ASSY 90MD BACKPLANE	A						
	005	01	71493032	8		1		PC	COVER METAL AL	P						
	006	01	71493105	4		1		PC	FACE PLATE	P						
	007	01	71493108	8		1		PC	BASE	P						
	008	01	71493295	1		2		PC	TRACK DISK MTG	P						
	009	01	71493296	9		2		PC	SLIDE DISK MTG	P						
	010	01	96837907	3		1		PC	CKT BRKR MAGNETIC 3.0 AMPS	P						
	011	01	71492955	1		1		PC	PANEL CABLE SUPPORT	P						
	012	01	71492966	0		4		PC	GUIDE CARD	P						
	014	02	71492968	4		1		PC	BUTTON SWITCH	P			15012			8321
	014	03	61409606	3		1		PC	SWITCH BUTTON ASSY	N		15012			0321	
	015	01	71493055	9		1		PC	PANEL SWITCH IND	P						
	016	01	51806600	9		1		PC	FAN, 50CFM 1PH 115VAC 50/60HZ	P						
	017	01	94375401	0		1		PC	GUARD, FAN 50/60HZ	P						
	018	01	77618000	2		1		PC	FLEX DISK DRV, 9406 2-SIDED	V						
	019	01	71493350	4		4		PC	FOOT	P						
	020	01	91976649	3		4		PC	MSCR PAN PHL M4X40MM STL ZP	B						

BUILD ARC 440

ASSEMBLY PARTS LIST

PRINT DATE	PAGE	FILE CHANGE NO.
03-31-83	2	00015812

DIV.	ASSEMBLY NUMBER	CD	REV	DWG.	DESCRIPTION	MC	STATUS	STATUS DATE	ENG. RESP.	FILE DATE
0860	15632983	I	0	D	FDD, CD110 PRIMARY 60HZ (TA)	0	REL	12-10-81	FA501C	03-31-83

T	FIND NO	LI	PART NUMBER	CD	M	QUANTITY		U/M	PART DESCRIPTION	MC	YLD	ECO. NO. IN	ECO. NO. OUT	S/N	WK IN	WK OUT
	021	01	91975724	5		8		PC	NUT, HEX M5 STL ZP	B			15786			8320
	021	02	15165001	7		8		PC	NUT, HEX/FLG-LK M5 STL ZP	B		15786			0320	
	022	01	15164911	8		4		PC	MSCR HEX/W-LK PLN M4X8MM STL	B						
	023	01	15164917	5		4		PC	MSCR HEX/W-LK PLN M5X8MM STL	B			15289			8238
	023	02	15164917	5		12		PC	MSCR HEX/W-LK PLN M5X8MM STL	B		15289			8230	
	024	01	91976758	2		5		PC	MSCR PAN PHL M5X10MM SST PASS	B			15289			8238
	025	01	91976864	8		4		PC	MSCR FLT PHL M5X10MM STL ZP	B						
	026	01	91976652	7		5		PC	MSCR PAN PHL M5X10MM STL ZP	B			15289			8230
	026	02	91976652	7		2		PC	MSCR PAN PHL M5X10MM STL ZP	B		15289			0230	
	027	01	91975706	2		5		PC	WSHR, M5 LOCK SST PASS	B			15289			8238
	028	01	71493078	1		5		PC	STANDOFF HEX METRIC CRS	P						
	029	01	51918435	2		1		PC	EMBLEM, CDC ID	P						
	031	01	93109381	9		2		PC	STOFF,NO.1/4 .25L RD ZINC	P						
	032	01	91975684	1		6		PC	WSHR, M5 EXT/T SST PASS	B			15706			8320
	032	02	91975671	8		6		PC	WSHR, M5 EXT/T SPB-STL ZP	B		15786			8320	
	033	01	93522018	6		1		PC	PLUG,SNAP BUTTON 1 1/4 DIA HO	P						
	034	01	94374900	2			125	PC	STRIP CONTACT	P						
	035	01	09040204	1		8		PC	WSHR, NO.10 DISHED LOCK STL	B			15706			8320
	036	01	51805700	5		4		PC	BUMPER SELF STICKING	P			15669			8301
	037	01	62044200	4		1		PC	CLAMP-CABLE ADHESIVE BACK	B						
	038	01	94277400	1		1		PC	STRAP, CBL TIE TYP-1 TO 5/8	B						
	039	01	71493294	4		1		PC	SHIELD	P						
	040	01	94952302	1		1		PC	CLIP CORD TYPE 3 NYLON	P						

BUILD ARC 440

ASSEMBLY PARTS LIST

PRINT DATE	PAGE	FILE CHANGE NO
03-31-83	3	00015812

DIV.	ASSEMBLY NUMBER	CP	REV.	DWG.	DESCRIPTION	MC	STATUS	STATUS DATE	DWG. DISP.	FILE DATE
0060	15632983	1	G	D	FDD, CD110 PRIMARY 60HZ (TA)	8	REL	12-18-81	FA501C	03-31-83

T	FIND NO	LI	PART NUMBER	CD	MC	QUANTITY		U/M	PART DESCRIPTION	MC	YLD	ECO. NO. IN	ECO. NO. OUT	S/N	WK IN	WK OUT
	041	01	10127103	9		4		PC	MSCR PAN PHL 4-40X.312 STL ZP	B						
	042	01	10126400	0		4		PC	WSHR, (4) EXT/T LK STL ZP	B						
	043	01	71493269	6		1		PC	SHIELD	P						
	044	01	T1493297	T		4		PC	ROD OPTIC	P						
	045	01	94850711	6			001	OZ	SEAL, EASTMAN CLR (910)	B						
	046	01	9427T411	8		2		PC	STRAP, CBL TIE TYP-1 TD 1-1/8	B						
	047	01	T1493354	6		1		PC	RAIL SUPPORT PC CD	P						
	048	01	T1493360	3		1		PC	GUIDE-PC CONN	P						
	049	01	T1493364	5		1		PC	SCREW SHLDR NYLON	P						
	050	01	9197650T	3		1		PC	MSCR PAN SLT M3X10MM NYL NAT	B						
									0055 TOTAL LINES							

P/N	HZ	LENGTH A(MM)
61409021	60	50.0±6
61409022	50	50.0 +3/-3

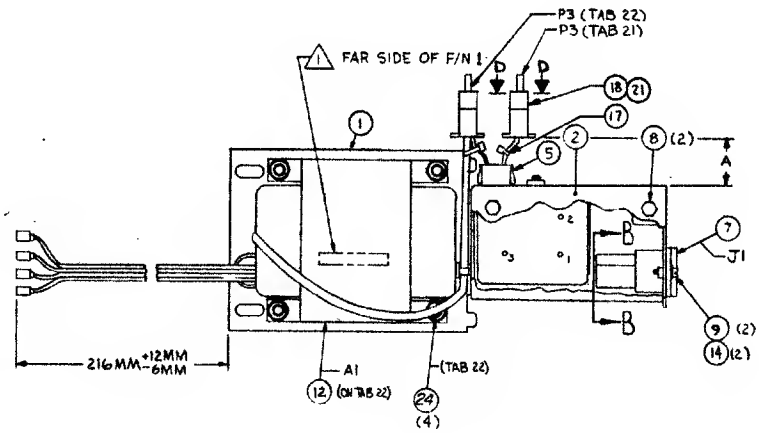

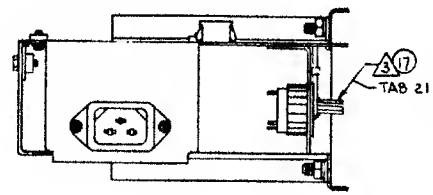

SECTION B-B

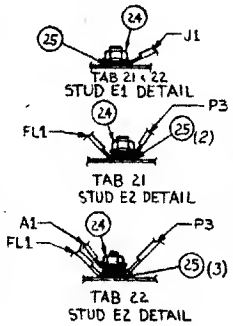

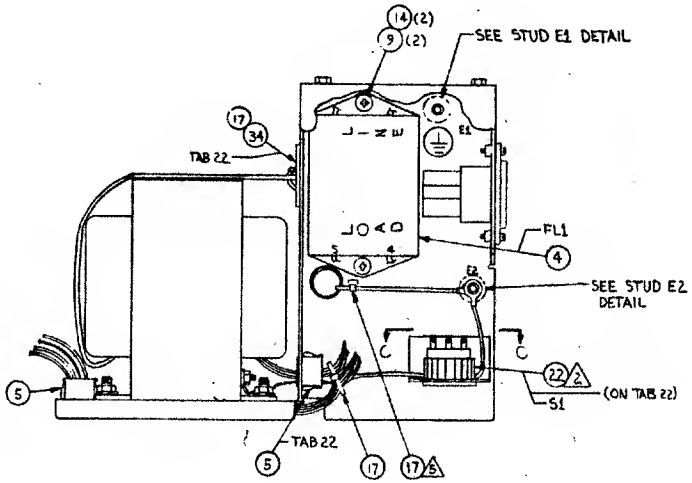

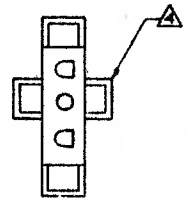

SECTION D-D

SECTION C-C
TAB 22

NOTES:

1. MARK "ASSY 61409021X" IN AREA SHOWN PER CDC SPEC 10121508.
2. SECURE PLASTIC NUT USING F/N 23.
3. ON TAB 21, CENTER WIRES AND STRAP AS SHOWN.
4. CLIP OFF TAB.
5. INSTALL AROUND ALL WIRES GOING TO P3 TO ALLOW P3 TO STICK OUT 50±6 MM

REV	ECO	DESCRIPTION	DRFT	DATE	CHKD	APP
A	[illegible]	RELEASED CLASS A				
B	14321	REVISED PER ECO	[illegible]	[illegible]		
C	14582	CHG REF NUMBERS ON EMI FILTER	W.J.G.	[illegible]	W.J.G.	
D	15229	REVISED PER ECO	E.E.	[illegible]	E.E.	[illegible]
E	15351	REVISED PER ECO	MR	[illegible]	[illegible]	[illegible]
F	15462	REVISED PER ECO	E.E.	[illegible]	E.E.	[illegible]
G	15509	CHG F/N 9 & 14	W.G.	[illegible]	W.G.	[illegible]
H	15634	P/L CHANGE SHLT, P/N 30	E.E.	[illegible]	E.E.	[illegible]
J	15786	REVISED PER ECO	[illegible]	[illegible]	[illegible]	[illegible]

METRIC

TITLE: AC ENTRY ASSY, FLEX DISK

CODE IDENT NO. 15920 | SIZE D | DRAWING NO. 61409021/22

SCALE 1/1 | SHEET 1 OF 1

APL 61409021/22

DO NOT SCALE DRAWING

FASCI-A/B

15632072/75

62949100 J

BUILD ARC 230

ASSEMBLY PARTS LIST

PRINT DATE	PAGE	FILE CHANGE NO.
03-02-83	1	00015786

DIV.	ASSEMBLY NUMBER	CD	REV.	DWG.	DESCRIPTION	MK	STATUS	STATUS DATE	ENG. RESP.	FILE DATE
0860	61409021	5	J	D	AC ENTRY, FLEX DISK 60HZ	A	REL	09-03-80	FA501A	03-02-83

T	FIND NO	LI	PART NUMBER	CD	M	QUANTITY		U/M	PART DESCRIPTION	MK	TLD	ECO. NO. IN	ECO NO. OUT	S/N	WK IN	WK OUT
	801	01	71492952	0		1		PC	BRACKET SWITCH/FILTER/XFORM	P						
	802	01	71492953	6		1		PC	COVER SWITCH/FILTER	P						
	804	01	15164356	6		1		PC	FILTER RFI	P						
	805	01	15012408	9		2		PC	95H0, SNAP-IN .500 M/H .381D	B						
	807	01	44674034	2		1		PC	CONN POWER RECEPT	P						
	808	01	15164917	5		2		PC	MSCR HEX/W-LK PLN M5X8MM STL	B						
	809	01	91976625	3		4		PC	HSCR PAN PHL M3X6MM STL ZP	B			15509			8243
	809	02	91976626	1		4		PC	MSCR PAN PHL M3X8MM STL ZP	B		15509			8243	
	810	01	51809101	2			020	FT	TAPE-WIRE MARKING CHAR 1	B						
	811	01	51809103	8			020	FT	TAPE-WIRE MARKING CHAR 3	B						
	814	01	91975669	2		2		PC	WSHR, M3 EXT/T SPG-STL ZP	B			15509			8243
	814	02	91975669	2		4		PC	WSHR, M3 EXT/T SPG-STL ZP	B		15509			8243	
	815	01	44674036	7		3		PC	CONN PWR RECPT	P						
	816	01	51797218	8		3		PC	LUG, 22-18GA SS10 INS-RING	B						
	817	01	94277400	1		1		PC	STRAP, CBL TIE TYP-1 TO 5/8	B			15351			8234
	817	02	94277400	1		3		PC	STRAP, CBL TIE TYP-1 TO 5/8	B		15351			8234	
	818	01	51906200	4		3		PC	CONT, SKT 20-14AWG SN STRIP	P						
	819	01	52810001	9		2	833	FT	WIR 18GA STRD BRN 600V UL PVC	W						
	820	01	52810020	9			833	FT	WIR 18GA STRD GRN/YEL 600V UL	W						
	821	01	51906001	6		1		PC	CONN, PLUG 3 CKT NYL/NAT F-1	P						
	824	01	91975724	5		2		PC	NUT, HEX M5 STL ZP	B			15786			8320
	824	02	15165001	7		2		PC	NUT, HEX/FLG-LK M5 STL ZP	B		15786			8320	
	825	01	91975671	8		6		PC	WSHR, M5 EXT/T SPG-STL ZP	B			15786			8320

BUILD ARC 230

ASSEMBLY PARTS LIST

PRINT DATE	PAGE	FILE CHANGE NO.
03-02-83	2	00015786

DIV.	ASSEMBLY NUMBER	CD	REV.	DWG.	DESCRIPTION	MK	STATUS	STATUS DATE	ENG. RESP.	FILE DATE
0860	61409021	5	J	D	AC ENTRY, FLEX DISK 60HZ	A	REL	09-03-80	FA501A	03-02-83

T	FIND NO	LI	PART NUMBER	CD	M	QUANTITY		U/M	PART DESCRIPTION	MK	TLD	ECO. NO. IN	ECO. NO. OUT	S/N	WK IN	WK OUT
	825	02	91975671	8		3		PC	WSHR, M5 EXT/T SPG-STL ZP	B		15786			8320	
	826	01	61409023	1		REF		PC	W/L AC ENTRY 60HZ	D						
	827	01	52810006	8		2	833	FT	WIR 18GA STRD BLU 600V UL PVC	W						
	828	01	93083004	7		2		PC	SPLICES 22-16	W						
	829	01	62201057	7		REF		PC	SCH DIAG 50/60HZ	D						
	830	01	95643231	4		4		PC	LUG, Q-CONN 22-18AWG FIG 5	P			15634			8313
	830	02	95643248	8		4		PC	CONN QUICK CONN 22-18 1.00L	P		15634			8313	
	831	01	51809102	0			020	FT	TAPE-WIRE MARKING CHAR 2	B						
	832	01	51809104	6			020	FT	TAPE-WIRE MARKING CHAR 4	B						
	833	01	24528636	4			333	FT	TBG, NO. 2 INS BLK UL PVC	B						
									0033 TOTAL LINES							

BUILD ARC 230

ASSEMBLY PARTS LIST

PRINT DATE	PAGE	FILE CHANGE NO.
03-01-83	1	00015786

DIV	ASSEMBLY NUMBER	CD	REV.	DWG.	DESCRIPTION	MC	STATUS	STATUS DATE	ENG. RESP	FILE DATE
0860	61409022	3	J	D	AC ENTRY, FLEX DISK 50HZ	A	REL	09-03-80	FA501A	03-01-83

T	FIND NO	LI	PART NUMBER	CD	M	QUANTITY		U/M	PART DESCRIPTION	MC	YLD	ECO. NO. IN	ECO. NO. OUT	S/N	WK IN	WK OUT
	001	01	71492952	8		1		PC	BRACKET SWITCH/FILTER/XFORM	P						
	002	01	71492953	6		1		PC	COVER SWITCH/FILTER	P						
	004	01	15164356	6		1		PC	FILTER RFI	P						
	005	01	15012408	9		3		PC	BSHG, SNAP-IN .500 M/H .381D	B						
	007	01	44674034	2		1		PC	CONN POWER RECEPT	P						
	008	01	15164917	5		2		PC	MSCR HEX/W-LK PLN M5X8MM STL	B						
	009	01	91976625	3		4		PC	MSCR PAN PHL M3X6MM STL ZP	B			15509			8243
	009	02	91976626	1		4		PC	MSCR PAN PHL M3X8MM STL ZP	B		15509			8243	
	010	01	51809101	2			020	FT	TAPE-WIRE MARKING CHAR 1	B						
	011	01	51809103	8			020	FT	TAPE-WIRE MARKING CHAR 3	B						
	012	01	51918789	2		1		PC	XFMR STEP DOWN 220/240V	P						
	013	01	09040204	1		4		PC	WSHR, NO.10 DISHED LOCK STL	B			15786			8320
	014	01	91975669	2		2		PC	WSHR, M3 EXT/T SPG-STL ZP	B			15509			8243
	014	02	91975669	2		4		PC	WSHR, M3 EXT/T SPG-STL ZP	B		15509			8243	
	015	01	44674036	7		3		PC	CONN PWR RECPT	P						
	016	01	51797218	8		2		PC	LUG, 22-18GA SS10 INS-RING	B						
	017	01	94277400	1		1		PC	STRAP, CBL TIE TYP-1 TO 5/8	B			14321			8041
	017	02	94277400	1		2		PC	STRAP, CBL TIE TYP-1 TO 5/8	B		14321	15351		8041	8234
	017	03	94277400	1		4		PC	STRAP, CBL TIE TYP-1 TO 5/8	B		15351			8234	
	019	01	52810001	9		2		FT	WIR 18GA STRD BRN 600V UL PVC	W						
	020	01	52810020	9			250	FT	WIR 18GA STRD GRN/YEL 600V UL	W						
	022	01	51918969	0		1		PC	SWITCH VOLTAGE SELECTOR	P						
	023	01	51873600	4			001	OZ	VARNISH INSUL RED GLPT	B						

BUILD ARC 230

ASSEMBLY PARTS LIST

PRINT DATE	PAGE	FILE CHANGE NO.
03-01-83	2	00015786

DIV	ASSEMBLY NUMBER	CD	REV.	DWG.	DESCRIPTION	MC	STATUS	STATUS DATE	ENG. RESP.	FILE DATE
0860	61409022	3	J	D	AC ENTRY, FLEX DISK 50HZ	A	REL	09-03-80	FA501A	03-01-83

T	FIND NO	LI	PART NUMBER	CD	M	QUANTITY		U/M	PART DESCRIPTION	MC	YLD	ECO. NO. IN	ECO. NO. OUT	S/N	WK IN	WK OUT
	024	01	91975724	5		6		PC	NUT, HEX M5 STL ZP	B			15786			8320
	024	02	15165001	7		6		PC	NUT, HEX/FLG-LK M5 STL ZP	B		15786			8320	
	025	01	91975671	8		6		PC	WSHR, M5 EXT/T SPG-STL ZP	B			15786			8320
	025	02	91975671	8		4		PC	WSHR, M5 EXT/T SPG-STL ZP	B		15786			8320	
	026	01	61409024	9		REF		PC	W/L AC ENTRY 50HZ	D						
	027	01	52810006	8		1	166	FT	WIR 18GA STRD BLU 600V UL PVC	W						
	028	01	93083004	7		2		PC	SPLICES 22-16	W						
	029	01	51758101	3			188	FT	INS SLV CLR PVC HEAT SHRINK	B						
	030	01	95643231	4		4		PC	LUG, Q-CONN 22-18AWG FIG 5	P			15634			8313
	030	02	95643248	8		4		PC	CONN QUICK CONN 22-18 1.00L	P		15634			8313	
	031	01	62201057	7		REF		PC	SCH DIAG 50/60HZ	D						
	032	01	51809102	0			020	FT	TAPE-WIRE MARKING CHAR 2	B						
	033	01	51809104	6			020	FT	TAPE-WIRE MARKING CHAR 4	B						
	034	01	62044200	4		1		PC	CLAMP-CABLE ADHESIVE BACK	B						
									0037 TOTAL LINES							

COMMON PARTS DATA APPLICABLE
TO BOTH PRE-PRODUCTION
AND PRODUCTION UNITS

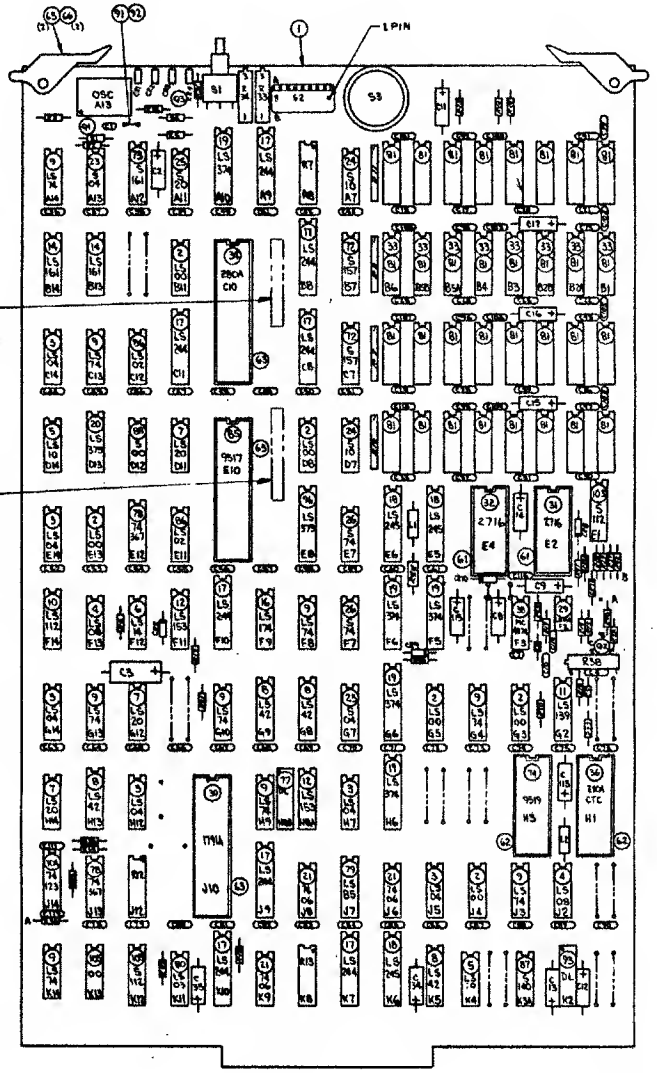

CROSS REFERENCE TABLE	
FIND NUMBER	REFERENCE DESIGNATION
37	OSC
39	S2
41	R3
42	R2,R4
44	R1
47	R5,R6
48	R15
51	C36 THRU C61 C63 THRU C76 C78 THRU C98,C114
53	C8,C9,C12,C13,C34,C95
54	C11, C14,C15,C16,C17,C113,C115
55	C3
56	C1
57	CR1 CR2 CR3 CR4
58	CR5 CR9, CR10, CR11
59	Q1,Q3
60	S1
69	C2
70	R8,R9,R10,R11
71	S3
75	C18 THRU C33 C99 THRU C110
82	R7,R12
83	R41
90	R18,R19,R21,R23,R25,R26,R27,R46
97	R20
102	C7
106	R33
107	R34
108	R38
110	Q2
111	R16,R17
112	R14,R15
113	R35,R36
114	R28,R29
115	R30,R37
116	R39,R40
117	R43
118	R32
119	R31
120	R42
121	R44
122	C116
124	CR8
125	C5,C6
126	C4,C10
127	C112
129	C111
130	L1,L2
131	R22,R24
132	CR7

NOTES:

1. MARK ASSY. NO., REV LEVEL, AND LOC CODE IN AREA SHOWN. MARK PER CDC SPEC 10121508, CHARACTER HEIGHT .12 (10 PT) COLOR WHITE.
2. MARK SERIAL NUMBER IN AREA SHOWN PER RVLOPS P&P NO. 80:20:34 AND PER MARKING REQUIREMENTS IN NOTE (1) ONE.
3. FIND NUMBERS, ELEMENT IDENTIFIERS, AND REFERENCE DESIGNATIONS ARE FOR REFERENCE ONLY AND DO NOT APPEAR ON PART.
4. AFTER ALIGNING R33, R34 AND R38, SEAL THEM WITH GLYPTAL CDC P/N 51873600.

CHANGE TABLE	
DELETIONS	ADDITIONS
CUT FOIL:	ADD WIRE SOLDER SIDE
1) K3 B-4 S.S.	1) K4-41 TO K3A-13
2) R42-B S.S.	2) R42-B TO R40-A
3) R33-1 S.S.	3) R10-A TO F2-5
4) R36-A S.S.	4) R38-2 TO F2-6
	5) F2-7 TO Q2-B
	6) ADD CENTER CONDUCTOR COAX FROM R33-2 TO R36-A
	7) ADD BRAID SHIELD COAX FROM S2-8A TO J14-B

INACTIVE

REVISION RECORD						
REV	ECO	DESCRIPTION	DRFT	DATE	CHKD	APP
07	51243	REPLACED 'A' SIZE ASSY DWG WITH 'D' SIZE PER ECO	WJU	12-9-80	WJG	[illegible]
08	51245	REVISED PER ECO	WJU	12-9-80	WJG	[illegible]
09	51233	CHG PER 94-SCHEMATIC	WJG	2-6-81	WJG	[illegible]
A	13969-A	RELEASED CLASS 'A'	—	—	—	[illegible]
B	14469	P/L CHANGE ONLY	EB	1/19/81	EB	[illegible]
C	14814	ADD NOTE 4 & DWG CHG	WJG	6-4-80	WJG	[illegible]
D	14871	INACTIVE	WJG	12-2-81	WJG	[illegible]

APL 90446260	FA501A	TITLE: P.C. CARD ASSEMBLY, 9BED (DISK CONTROLLER)	
DO NOT SCALE DRAWING	W GLASER 11-80		
	D. SAND 11-80	CODE IDENT 15920	D 90446260
	SCALE 2/1		SHEET 1 OF 1

ASSEMBLY PARTS LIST

BUILD ARC 214

PRINT DATE	PAGE	FILE CHANGE NO.
02-05-81	1	14671

DIV	ASSEMBLY NUMBER	CD.	REV.	DWG.	DESCRIPTION	MC	STATUS	STATUS DATE	ENG. REP.	FILE DATE
0860	90446260	3	D	0	PW BO ASSY 9BED REPLACED BY 90446284	S	SEL INA	12-17-80	FA501A	02-05-81

T	FIND NO.	U	PART NUMBER	CD	M	QUANTITY	U/M	PART DESCRIPTION	MC	YLD	SCD. NO. IN	SCD. NO. OUT	S/N	WK IN	WK OUT
	001	01	90446259	5		1	PC	PW BD 9BEO	P						
	002	01	15144900	6		6	PC	IC 74LS00 140LS QUAD 2-1NP	P						
	003	01	15145100	2		6	PC	IC 74LS04 146LS 7TL HEX INV	P						
	004	01	15145400	6		2	PC	IC 74LS08 201LS Q21NP AND	P						
	005	01	15145600	1		2	PC	IC 74LS10 141LS 7TL 3I/P NAND	P						
	006	01	15148500	0		1	PC	IC 74LS14 943LS 7TL 6 ND RCVR	P						
	007	01	15145900	5		3	PC	IC 74LS20 208LS TTL 41/P NAND	P						
	008	01	15147600	9		4	PC	IC 7YPE 74LS42	P						
	009	01	15146300	7		9	PC	IC 74LS74 175LS F/F DUAL D	P						
	010	01	15146500	2		1	PC	IC 74LS112 243LS TTL DUAL F/F	P						
	011	01	15146600	0		1	PC	IC 74LS139 538LS DECODER 10F4	P						
	012	01	15148700	6		2	PC	IC 74LS153 7TL DUAL 41/P	P						
	014	01	15146800	6		2	PC	IC 74LS161 158LS 4B1T COUNTER	P						
	016	01	15147500	1		1	PC	IC 74LS174 TTL 6 B1T 16 P1N	P						
	017	01	15163414	4		8	PC	IC 74LS244 OC7AL BFR 3-S OP	P						
	018	01	15163324	5		3	PC	IC 74LS245 OCTAL BUS XCE1VER	P						
	019	01	15163404	5		5	PC	IC 74LS374 OCTAL D-EOBE F-F	P						
	020	01	15163232	0		1	PC	IC 74LS375 TTL 4-B1T	P						
	021	01	96744155	1		3	PC	IC 7406 ORVR HEX 1NV BUFFER	P						
	023	01	88883700	2		2	PC	IC 74S04 146S TTL HEX 1NV7R	P						
	024	01	88884200	2		2	PC	IC 74S10 141S 7TL 3 3-1N NAND	P						

ASSEMBLY PARTS LIST

BUILD ARC 214

PRINT DATE	PAGE	FILE CHANGE NO.
02-05-81	2	14671

DIV	ASSEMBLY NUMBER	CD.	REV.	DWG.	DESCRIPTION	MC	STATUS	STATUS DATE	ENG. REP.	FILE DATE
0860	90446260	3	D	0	PW BO ASSY 9BED REPLACED BY 90446284	S	SEL INA	12-17-80	FA501A	02-05-81

T	FIND NO.	U	PART NUMBER	CD	M	QUANTITY	U/M	PART DESCRIPTION	MC	YLD	SCD. NO. IN	SCD. NO. OUT	S/N	WK IN	WK OUT
	025	01	88885300	9		1	PC	IC 74S20 TTL DUAL 4 1/P	P						
	026	01	88923000	9		2	PC	1 C 74S74 7TL OUAL	P						
	029	01	15157100	7		1	PC	IC LM358N 344 DUAL OP-AMP	P						
	030	01	15163444	1		1	PC	IC FD1791	P						
	031	01	66312068	1		1	PC	FLEX18LE D15K COOED E-ROM	6						
	032	01	66312069	9		1	PC	FLEX18LE D15K CODEO E-ROM	6						
	033	01	15153B21	2		8	PC	IC 4116 MOS 163B4-BI7 RAM	P						
	034	01	15163201	5		1	PC	IC Z80A MO5 8817 RROCE55OR	P						
	036	01	15164429	1		1	PC	IC Z80A-CTC 5IL1CON GATE NMOS	P						
	037	01	51904109	9		1	PC	OSC1LLATOR T7L D 1 P	P						
	038	01	15105700	7		1	PC	IC 4024 5B2 7TL DL/V CON7 MVB	P						
	039	01	83452230	2		1	PC	SW17CH DUAL 8POS .88 F1G 2	P						
	041	01	94402116	1		1	PC	RES FM 22 OHM 1/4W CARBON	P						
	042	01	94402140	1		2	PC	RE5 FM 220 OHM 1/4W CARBDN	P						
	044	01	94402157	5		1	PC	RE5 FM 1.1K OHM 1/4W CARBON	P						
	047	01	94402180	7		2	PC	RE5 FM 10K OHM 1/4W CARBON	P						
	048	01	95B94500	8		1	PC	RE5 MOO 16 P1N5 2B RE51STORS	P						
	051	01	51001120	8		62	PC	CAP CER F-2 .01UF +80-20P 25V	P						
	053	01	24504333	6		6	PC	CAP FXD TANT 2.2UF 20P 35VOCW	P						
	054	01	24504369	0		7	PC	CAP FXO TANT 10UF 20P 15VOCW	P						
	055	01	24504373	2		1	PC	CAP FXD TANT 47UF 20P 15VOCW	P						

BUILD ARC 214

ASSEMBLY PARTS LIST

PRINT DATE	PAGE	FILE CHANGE NO.
02-05-81	3	14571

DIV	ASSEMBLY NUMBER	CD.	REV.	SUPP.	DESCRIPTION	MC	STATUS	STATUS DATE	ENG. REP.	FILE DATE
0860	90446260	3	DL	0	PW BD ASSY 98ED REKACED BY 90446284	S	REWA	12-17-80	FA501A	02-05-81

T	FIND NO.	U	PART NUMBER	CD	IN	QUANTITY		U/M	PART DESCRIPTION	MC	YLD	SCD. NO. IN	SCD. NO. OUT	S/N	WK IN	WK OUT
	056	01	75887677	5		1		PC	CAP CER 33PF 5P	P						
	057	01	19171201	T		4		PC	LIGHT IND	P						
	058	01	5100T385	1		4		PC	DID IN4148 10MA MICRO SIL 30V	P						
	059	01	51T14000	0		2		PC	XSTR 2N290T PNP SIL	P						
	060	01	51940524	5		1		PC	SWITCH PUSH BUTTON RT ANGLE	P						
	061	01	51848404	3		2		PC	SDCKET, IC 24 PDS D-I-L TIN	P						
	062	01	51848405	0		2		PC	SOCKET, IC 28 PDS D-I-L TIN	P						
	063	01	51848406	8		3		PC	SOCKE7, IC 40 PDS D-I-L 7IN	P						
	065	01	82311900	3		2		PC	INJECTOR-EJECTOR, NA7URAL PC8	P						
	066	01	93533118	I		2		PC	ROLLPIN, .125D X .250L STL ZP	8						
	069	01	24504320	3		1		PC	CAP TANT 6DCWV 33UF 20P	P						
	0T0	01	94375122	2		4		PC	RES 8SIP NTWK 470HM 3P	P						
	0T1	01	94T89205	5		1		PC	SWITCH ROTARY PC 10 POS	P						
	0T2	01	1511T400	0		2		PC	IC 77L BMUX 2-1 A 1895 DIC16	P						
	0T3	01	15150400	8		1		PC	IC 93S16 TTL 48IT	P						
	0T4	01	15163459	9		1		PC	IC 9519 INT CDNT	P						
	0T5	01	94354826	3		28		PC	CAP FXD CER 0.10UF 50V	P						
	0TT	01	51918283	6		1		PC	DELAY LINE TAP 100 OHM FIG 5	P						
	078	01	15140400	1		2		PC	1C DM 809T HEX BUFFER TRI STA	P						
	0T9	01	1514T200	8		1		PC	1C 74LS85 COMP T7L 4 8IT	P						
	080	01	15145200	0		1		PC	IC T4LS03 202LS TTL4 2-1 NAND	P						

BUILD ARC 214

ASSEMBLY PARTS LIST

PRINT DATE	PAGE	FILE CHANGE NO.
02-05-81	4	14571

DIV	ASSEMBLY NUMBER	CD.	REV.	SUPP.	DESCRIPTION	MC	STATUS	STATUS DATE	ENG. REP.	FILE DATE
0860	90446260	3	DL	0	PW BD ASSY 98ED REKACED BY 90446284	S	REWA	12-17-80	FA501A	02-05-81

T	FIND NO.	U	PART NUMBER	CD	IN	QUANTITY		U/M	PART DESCRIPTION	MC	YLD	SCD. NO. IN	SCD. NO. OUT	S/N	WK IN	WK OUT
	081	01	51848401	9		32		PC	SOCKET, IC 16 PDS D-1-L TIN	P						
	082	01	T5738666	9		2		PC	RES PAK 10.0K DHM 1.50W FIG 2	P						
	083	01	94402141	9		1		PC	RES FM 240 OHM 1/4W CARBON	P						
	085	01	15163458	1		1		PC	IC 9517A MULTIMDDE DMA CONT	P						
	086	01	15145000	4		2		PC	1C 74L502 148LS Q21NP NOR	P						
	08T	01	15158T00	3		1		PC	IC 774S140 77L OUAL 4 I/P GA7	P						
	088	01	88884500	5		1		PC	1C 74S00 1405 7TL QD 2IN NAND	P						
	090	01	94402156	T		8		PC	RES FM 1K OHM 1/4W CARBDN	P						
	091	01	51903480	3		2		PC	PIN, .025 IN SQ PC MTG 2A	P						
	092	01	TT612624	5		1		PC	CDNNECTDR, JUMPER	P						
	093	01	51918281	0		1		PC	DELAY LINE TAP 200 OHM FIG 3	P						
	094	01	90446122	5		REF		PC	SCH DIAG 98ED	D			14469			8103
	094	02	90446258	7		REF		PC	SCH DIAG 98ED	D		14469			8103	
	095	01	16033200	3		REF		PC	FA8R1CA710N SPEC 70 PAK	D						
	096	01	15163434	2		1		PC	IC T4LS3T3 DCTAL O LATCH	P						
	09T	01	94402168	2		1		PC	RES FM 3.3K OHM 1/4W CARBON	P						
	102	01	9422722T	9		1		PC	CAP 110 PF DIPPED MICA	P						
	103	01	15158600	5		2		PC	IC T4S112 TTL DUAL J-K NET	P						
	104	01	50254300	2		1		PC	1C 74123 193 TTL 2 RE7GR MV8	P						
	105	01	66299099	3		I		PC	IC 7400 TTL QUAD 2-IN NAND	P						
	106	01	51908710	0		1		PC	RES CERM VAR 20K OHM 10P 3/4W	P						

BUILD ARC 214

ASSEMBLY PARTS LIST

PRINT DATE	PAGE	FILE CHANGE NO.
02-05-81	5	14571

DIV	ASSEMBLY NUMBER	CD.	REV.	DWG.	DESCRIPTION	MC	STATUS	STATUS DATE	ENG. ORGP.	FILE DATE
0860	90446260	3	D	0	PW BD ASSY 98ED REPLACED BY 90446264	S	REL	12-17-80	FA501A	02-05-81

T	FIND NO.	U	PART NUMBER	CD	W	QUANTITY		U/M	PART DESCRIPTION	MC	TLD	ECO. NO. IN	ECO. NO. OUT	S/N	WK IN	WK OUT
	107	01	51908709	2		1		PC	RES VAR 10K OHM	P						
	108	01	51908708	4		1		PC	RES CER VAR 5K OHM 10P 3/4W	P						
	110	01	51003092	7		1		PC	XSTR 2N2222 HI SPEED NPN 51L	P						
	111	01	94360304	3		2		PC	RES 1100 OHMS 1/4W 1P	P						
	112	01	94360352	2		2		PC	RES 3480 OHMS 1/4W 1P	P						
	113	01	94402173	2		2		PC	RES FM 5.1K OHM 1/4W CARBON	P						
	114	01	94402164	1		2		PC	RES FM 2.2K OHM 1/4W CARBON	P						
	115	01	94360400	9		2		PC	RES FKD FM 10.0K OHM 1P 1/4W	P						
	116	01	94402166	6		2		PC	RES FM 2.7K OHM 1/4W CARBON	P						
	117	01	94402158	3		1		PC	RES FM 1.2KOHM 1/4W CARBON	P						
	118	01	94402154	2		1		PC	RES FM 820 OHM 1/4W CARBON	P						
	119	01	94402139	3		1		PC	RES FM 200 OHM 1/4W CARBON	P						
	120	01	94402161	7		1		PC	RES FM 1.6K OHM 1/4W CARBON	P						
	121	01	24580144	1		1		PC	RES FKD COMP 160 OHMS 1/2W 5P	P						
	122	01	94842154	0		1		PC	CAP FXD CER .001UF 10P 1000V	P						
	124	01	15101109	5		1		PC	DIO 1N752A 400MW ZEN VR 5.6V	P						
	125	01	94227253	5		2		PC	CAP 1300 PF DIPPED MICA	P						
	126	01	94354824	8		2		PC	CAP CER 0.047 UF TYPE 1 20P	P						
	127	01	94240423	7		1		PC	CAP CER 150PF 50V 10P	P						
	129	01	94240421	1		1		PC	CAP CER 82 PF 50V	P						
	130	01	94356324	7		2		PC	INDUCTOR 10 MH	P						

BUILD ARC 214

ASSEMBLY PARTS LIST

PRINT DATE	PAGE	FILE CHANGE NO.
02-05-81	6	14571

DIV	ASSEMBLY NUMBER	CD.	REV.	DWG.	DESCRIPTION	MC	STATUS	STATUS DATE	ENG. ORGP.	FILE DATE
0860	90446260	3	D	0	PW BD ASSY 98ED REPLACED BY 90446264	S	REL	12-17-80	FA501A	02-05-81

T	FIND NO.	U	PART NUMBER	CD	W	QUANTITY		U/M	PART DESCRIPTION	MC	TLD	ECO. NO. IN	ECO. NO. OUT	S/N	WK IN	WK OUT
	131	01	94402148	4		2		PC	RES FM 470 OHM 1/4W CARBON	P						
	132	01	15101108	7		1		PC	DIO 1N751A 400MW ZEN VR 5.1V	P						
	133	01	51850400	6		1	083	FT	CABLE RAD/FRQ 26GA STRD RG	W						
	135	01	51873600	4			015	OZ	VARNISH INSUL RED GLPT	B		14514			8105	
									0109 TOTAL LINES							

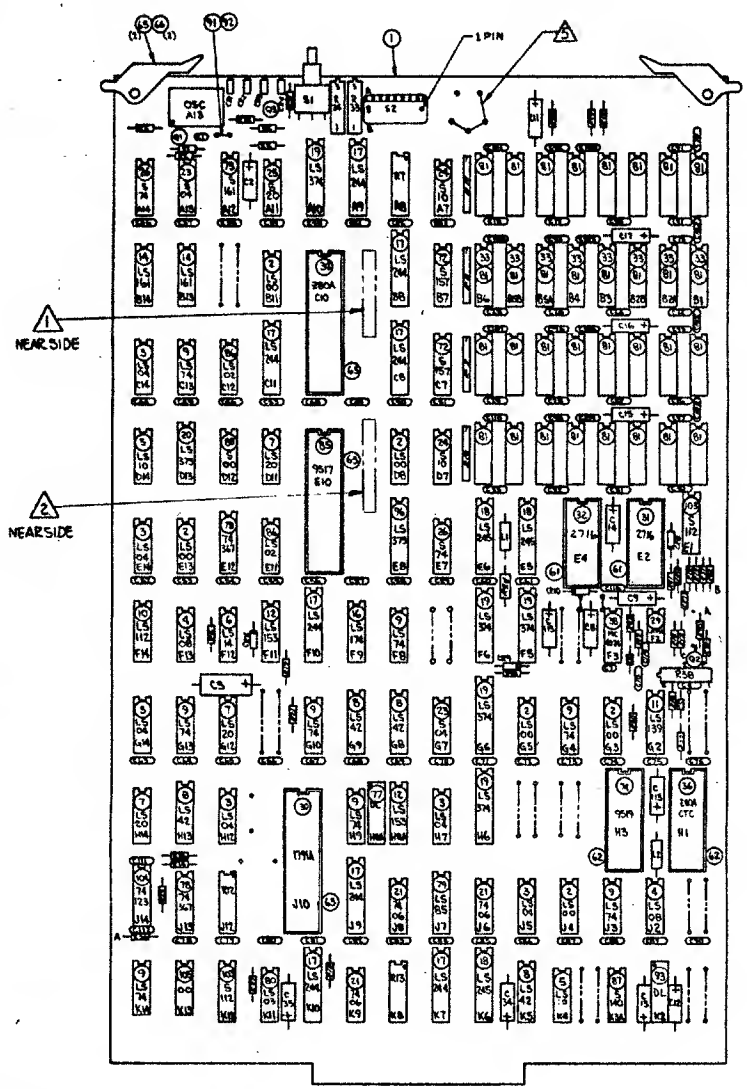

CROSS REFERENCE TABLE	
FIND NUMBER	REFERENCE DESIGNATION
37	OSC
39	S2
41	R3
42	R2,R4,
44	R1
47	R5,R6
48	R15
51	C36 THRU C61 C65 THRU C76 C78 THRU C98,C114
53	C8,C9,C12,C13,C34,C35
54	C11, C14,C15,C16,C17,C113,C115
55	C3
56	C1,
57	CR1 CR2 CR3 CR4
58	CR5 CR9,CR10,CR11
59	Q1,Q3
60	S1
69	C2
70	R8,R9,R10,R11
75	C18 THRU C33 C99 THRU C110
82	R7,R12
83	R41
90	R18,R19,R21,R23,R25,R26,R27,R45
97	R20
102	C7
106	R33
107	R34
108	R38
110	Q2
111	R16,R17
112	R14,R15
113	R35,R36
114	R28,R29
115	R30,R37
116	R39,R40
117	R43
118	R32
119	R31
120	R42
121	R44
122	C116
124	CR8
125	C5,C6
126	C4,C10
127	C112
129	C111
130	L1,L2
131	R22,R24
132	CR7

NOTES:

1. MARK ASSY NO., AND REV LEVEL .12 HIGH, WHITE IN AREA SHOWN PER CDC SPEC 10121508.
2. MARK SERIAL NUMBER IN AREA SHOWN PER RVLOPS P&P NO. 80:20:34 AND PER MARKING REQUIREMENTS IN NOTE (1) ONE.
3. FIND NUMBERS, ELEMENT IDENTIFIERS, AND REFERENCE DESIGNATIONS ARE FOR REFERENCE ONLY AND DO NOT APPEAR ON PART.
4. AFTER ALIGNING R33, R34 AND R38, SEAL THEM WITH GLYPTAL CDC P/N 51873400.
5. SOLDER 22GA. BUSS WIRE (F/N 136) IN THIS CONFIGURATION.

CHANGE TABLE	
DELETIONS	ADDITIONS
CUT FOIL:	ADD WIRE SOLDER SIDE
1) K3 B-4 S.S.	1) K4-11 TO K3A-13
2) R42-B S.S.	2) R42 B TO R40-A
3) R33-1 S.S.	3) R40-A TO F2-5
4) R36-A S.S.	4) R38-2 TO F2-6
	5) F2-7 TO Q2-B
	6) ADD CENTER CONDUCTOR COAX FROM R33-2 TO R36-A
	7) ADD BRAID SHIELD COAX FROM S2-8A TO J14-B
	8 E10-19 TO E10-20

INACTIVE

REVISION RECORD						
REV	ECO	DESCRIPTION	DRFT	DATE	CHKD	APP
A	[illegible]	RELEASED CLASS "A"		[illegible]		
B	14965	REVISED PER ECO	EG	1/4/72	LE	
C	15351	ADDED ITEM 8 TO CHG TABLE	[illegible]	[illegible]	[illegible]	
D	15675	CHG F/N 16	R.H.	1-17-73	[illegible]	[illegible]
E	15771	INACTIVE, REPLACED BY 90446570	EE	3/16/73	EE	[illegible]

APL 90446284	DETACHED LISTS	CONTROL DATA FA501A	TITLE P.C. CARD ASSEMBLY, 9BED (DISK CONTROLLER)
		DO NOT SCALE DRAWING	CODE IDENT 15920
			D 90446284
			SCALE 2/1 NHA SHEET 1 OF 1

BUILD ARC 214

ASSEMBLY PARTS LIST

PRINT DATE	PAGE	FILE CHANGE NO
03-09-83	1	00015TT1

DIV	ASSEMBLY NUMBER	CD	REV.	DWG.	DESCRIPTION	MC	STATUS	STATUS DATE	ENG. RESP	FILE DATE
0860	90446284	3	E	D	REPLACED BY 90446570 15771	N	INA	03-04-83	FA501A	03-09-83

T	FIND NO	LI	PART NUMBER	CD	M	QUANTITY	U/M	PART DESCRIPTION	MC	YLD	ECO. NO. IN	ECO. NO. OUT	S/N	WK IN	WK OUT
	001	01	90446259	5		1	PC	PW BD 98ED	P						
	002	01	15144900	6		6	PC	IC 74LS00 140LS TTL 4 2IN NND	P						
	003	01	15145100	2		6	PC	IC T4LS04 146LS TTL HEX INVTR	P						
	004	01	15145400	6		2	PC	IC T4LS08 201LS TTL 4 2IN AND	P						
	005	01	15145600	1		2	PC	IC 74LS10 141LS TTL 3 3IN NND	P						
	006	01	15148500	0		1	PC	IC T4LS14 943LS TTL HEX NAND	P						
	007	01	15145900	5		3	PC	IC T4LS20 208LS TTL 2 4IN NND	P						
	008	01	15147600	9		4	PC	IC TYPE 74LS42	P						
	009	01	15146300	T		8	PC	IC 74LS74 1T5LS TTL 2 D F/F	P						
	010	01	15146500	2		1	PC	IC 74LS112 243LS TTL DUAL F/F	P						
	011	01	15146600	0		1	PC	IC 74LS139 538LS DECODER 10F4	P						
	012	01	15148T00	6		2	PC	IC T4LS153 TTL DUAL 41/P	P						
	014	01	15146800	6		2	PC	IC 74LS161 158LS TTL 4B CNTR	P						
	016	01	15147500	1		1	PC	IC 74LS1T4 519LS TTL 6B LATCH	P			156T5			8325
	016	02	95965100	1		1	PC	IC 74LS174 6BIT LATCH	P		156T5			8325	
	01T	01	15163414	4		8	PC	IC 74LS244 TTL 8 3-STATE DRVR	P						
	018	01	15163324	5		3	PC	IC 74LS245 TTL 8 BUS XCEIVER	P						
	019	01	15163404	5		5	PC	IC 74LS3T4 TTL 8 D FLIP/FLOP	P						
	020	01	15163232	0		1	PC	IC 74LS3T5 TTL 4-BIT	P						
	021	01	96T44155	1		3	PC	IC 7406 DRVR HEX INV BUFFER	P						
	023	01	88883700	2		2	PC	IC T4S04 146S TTL HEX INVTR	P						

BUILD ARC 214

ASSEMBLY PARTS LIST

PRINT DATE	PAGE	FILE CHANGE NO.
03-09-83	2	00015TT1

DIV	ASSEMBLY NUMBER	CD	REV.	DWG.	DESCRIPTION	MC	STATUS	STATUS DATE	ENG. RESP.	FILE DATE
0860	90446284	3	E	D	REPLACED BY 90446570 15771	N	INA	03-04-83	FA501A	03-09-83

T	FIND NO	LI	PART NUMBER	CD	M	QUANTITY	U/M	PART DESCRIPTION	MC	YLD	ECO. NO. IN	ECO. NO. OUT	S/N	WK IN	WK OUT
	024	01	88884200	2		2	PC	IC T4S10 141S TTL 3 3-IN NAND	P						
	025	01	88885300	9		1	PC	IC T4S20 208S TTL 2 4-IN NAND	P						
	026	01	88923000	9		2	PC	IC 74ST4 1T5S TTL 2 D-TYP F-F	P						
	829	01	1515T100	T		1	PC	IC LM358N 344 DUAL OP-AMP	P						
	030	01	15163444	1		1	PC	IC FD1T91	P						
	031	01	66312070	T		1	PC	FLEX DISK CODED E-ROM	G						
	032	01	66312071	5		1	PC	FLEX DISK CODED E-ROM	G						
	033	01	15153821	2		8	PC	IC 4116 MOS 16384-BIT RAM	P						
	034	01	15163201	5		1	PC	IC 780A MOS 8BIT PROCESSOR	P						
	036	01	15164429	1		1	PC	IC 280A-CTC SILICON GATE NMOS	P						
	03T	01	51904109	9		1	PC	OSC, TTL DIP 16.000MHZ 500MW	P						
	038	01	15105700	7		1	PC	IC 4024 582 TTL DL/V CONT MVB	P						
	039	01	83452230	2		1	PC	SWITCH DUAL 8PDS .88 FIG 2	P						
	041	01	94402116	1		1	PC	RES FXD C FM 22 OHM 5P 1/4W	P						
	042	01	94402140	1		2	PC	RES FXD C FM 220 OHM 5P 1/4W	P						
	044	01	9440215T	5		1	PC	RES FXD C FM 1.1K OHM 5P 1/4W	P						
	04T	01	94402180	7		2	PC	RES FXD C FM 10K OHM 5P 1/4W	P						
	048	01	95894500	8		1	PC	RES MDD 16 PINS 28 RESISTORS	P						
	051	02	19115400	4		62	PC	CAP FXD CEP .01UF +80-20P 50V	P		14856			8148	
	053	01	24504333	6		6	PC	CAP FXD TANT 2.2UF 20P 35VDCW	P						
	054	01	24504369	0		T	PC	CAP FXD TANT 10UF 20P 15VDCW	P						

BUILD ARC 214

ASSEMBLY PARTS LIST

PRINT DATE	PAGE	FILE CHANGE NO.
03-09-83	3	00015771

DIV.	ASSEMBLY NUMBER	CD	REV.	DWG.	DESCRIPTION	MC	STATUS	STATUS DATE	ENG. RESP.	FILE DATE
0860	90446284	3	E	D	REPLACED BY 90446570 15771	N	INA	03-04-83	FA501A	03-09-83

TYPE	FIND NO	LI	PART NUMBER	CD	MA	QUANTITY	U/M	PART DESCRIPTION	MC	YLD	ECO. NO. IN	ECO. NO. OUT	S/N	WK IN	WK OUT
	055	01	24504373	2		1	PC	CAP FXD TANT 47UF 20P 15VDCW	P						
	056	01	75807677	5		1	PC	CAP CER 33PF 5P	P						
	057	01	19171201	7		4	PC	LIGHT IND	P						
	058	01	51007385	1		4	PC	DIO 1N4148 SIL MICRO 30V 10MA	P						
	059	01	51714080	0		2	PC	XSTR, 2N2907 BI-POLAR PNP 51	P						
	060	01	51940524	5		1	PC	SWITCH PUSH BUTTON RT ANGLE	P						
	061	01	51848404	3		2	PC	SOCKET, IC 24-POS DIL F-I SN	P						
	062	01	51848405	0		2	PC	SOCKET, IC 28-POS DIL F-I SN	P						
	063	01	51848406	8		3	PC	SOCKET, IC 40-POS DIL F-I SN	P						
	065	01	82311900	3		2	PC	INJECTOR-EJECTOR, NATURAL PCB	P						
	066	01	93533118	1		2	PC	ROLLPIN, .125D X .250L STL ZP	B						
	069	01	24504320	3		1	PC	CAP FXD TANT 33UF 20P 6VDCW	P						
	070	01	94375122	2		4	PC	RES SIP NTWK 470HM 3P	P						
	072	01	15117400	0		2	PC	IC TTL 8MUX 2-1 A 1895 DIC16	P						
	073	01	15150400	8		1	PC	IC 93516 TTL 4BIT	P						
	074	01	15163459	9		1	PC	IC 9519 INT CONT	P						
	075	01	94354826	3		28	PC	CAP FXD CEP 0.10UF 50V	P						
	077	01	51918283	6		1	PC	DELAY LINE TAP 100 OHM FIG 5	P						
	078	01	15140400	1		2	PC	IC DM 8097 HEX BUFFER TRI STA	P						
	079	01	15147200	8		1	PC	IC 74LS85 COMP TTL 4 BIT	P						
	080	01	15145200	0		1	PC	IC 74LS03 202LS TTL4 2-I NAND	P						

BUILD ARC 214

ASSEMBLY PARTS LIST

PRINT DATE	PAGE	FILE CHANGE NO.
03-09-83	4	00015771

DIV.	ASSEMBLY NUMBER	CD	REV.	DWG.	DESCRIPTION	MC	STATUS	STATUS DATE	ENG. RESP.	FILE DATE
0860	90446284	3	E	D	REPLACED BY 90446570 15771	N	INA	03-04-83	FA501A	03-09-83

TYPE	FIND NO	LI	PART NUMBER	CD	MA	QUANTITY	U/M	PART DESCRIPTION	MC	YLD	ECO. NO. IN	ECO. NO. OUT	S/N	WK IN	WK OUT
	081	01	51848401	9		32	PC	SOCKET, IC 16-POS DIL F-I SN	P						
	082	01	75738666	9		2	PC	RES 16PIN DIP 10K R 2P 1.5W 2	P						
	083	01	94402141	9		1	PC	RES FXD C FM 240 OHM 5P 1/4W	P						
	085	01	15163458	1		1	PC	IC 9517A MULTIMODE DMA CONT	P						
	086	01	15145000	4		2	PC	IC 74LS02 148LS TTL 4 2IN NOR	P						
	087	01	15158700	3		1	PC	IC 745140 TTL 2 4IN NAND BFR	P						
	088	01	88884500	5		1	PC	IC 74500 140S TTL 4 2-IN NAND	P						
	090	01	94402156	7		8	PC	RES FXD C FM 1.0K OHM 5P 1/4W	P						
	091	01	51903400	3		2	PC	PIN, .025 IN SQ PC MTG 2A	P						
	092	01	77612624	5		1	PC	CONNECTOR, JUMPER	P						
	093	01	51918281	0		1	PC	DELAY LINE TAP 200 OHM FIG 3	P						
	094	01	90446258	7		REF	PC	SCH DIAG 9RED	U						
	095	01	16033200	3		REF	PC	FAB SPEC, MULTI-LAYER PWR	U						
	096	01	15163434	2		1	PC	IC 74LS373 8 D XPARENT LATCH	P						
	097	01	94402168	2		1	PC	RES FXD C FM 3.3K OHM 5P 1/4W	P						
	102	01	94227227	9		1	PC	CAP 110 PF DIPPED MICA	P						
	103	01	15158600	5		2	PC	IC 745112 243S TTL 2 J-K F/F	P						
	104	01	50254300	2		1	PC	IC 74123 193 TTL 2 RETGR MVB	P						
	105	01	66299099	3		1	PC	IC 7400 TTL QUAD 2-IN NAND	P						
	106	01	51908710	0		1	PC	RES CERM VAR 20K OHM 10P 3/4W	P						
	107	01	51908709	2		1	PC	RES VAR 10K OHM	P						

BUILD ARC 214

ASSEMBLY PARTS LIST

PRINT DATE	PAGE	FILE CHANGE NO
03-09-83	5	00015771

DIV	ASSEMBLY NUMBER	CO	REV	DWG	DESCRIPTION	MC	STATUS	STATUS DATE	ENG. DESP.	FILE DATE
0860	90446284	3	E	D	REPLACED BY 90446570 15771	N	INA	03-04-83	FA501A	03-09-83

T	FIND NO	LI	PART NUMBER	CO	M	QUANTITY		U/M	PART DESCRIPTION	MC	YLD	ECO. NO. IN	ECO. NO. OUT	S/N	WK IN	WK OUT
	108	01	51908708	4		1		PC	RES CER VAR 5K OHM 10P 3/4W	P						
	110	01	51003092	7		1		PC	XSTR, 2N2222 HI-SPEED NPN SI	P						
	111	01	94360304	3		2		PC	RES FXD FM 1100 OHM 1P 1/4W	P						
	112	01	94360352	2		2		PC	RES FXD FM 3480 OHM 1P 1/4W	P						
	113	01	94402173	2		2		PC	RES FXD C FM 5.1K OHM 5P 1/4W	P						
	114	01	94402164	1		2		PC	RES FXD C FM 2.2K OHM 5P 1/4W	P						
	115	01	94360400	9		2		PC	RES FXD FM 10.0K OHM 1P 1/4W	P						
	116	01	94402166	6		2		PC	RES FXD C FM 2.7K OHM 5P 1/4W	P						
	117	01	94402158	3		1		PC	RES FXD C FM 1.2K OHM 5P 1/4W	P						
	118	01	94402154	2		1		PC	RES FXD C FM 820 OHM 5P 1/4W	P						
	119	01	94402139	3		1		PC	RES FXD C FM 200 OHM 5P 1/4W	P						
	120	01	94402161	7		1		PC	RES FXD C FM 1.6K OHM 5P 1/4W	P						
	121	01	24500144	1		1		PC	RES FXD COMP 160 OHM 5P 1/2W	P						
	122	01	94842154	0		1		PC	CAP FXD CER .001UF 10P 1000V	P						
	124	01	15101109	5		1		PC	DIO 1N752A 400MW ZEN VR 5.6V	P						
	125	01	94227253	5		2		PC	CAP 1300 PF DIPPED MICA	P						
	126	01	94354824	8		2		PC	CAP CER 0.047 UF TYPE 1 20P	P						
	127	01	94240423	7		1		PC	CAP FXD CER 150PF 10P 50VDCW	P						
	129	01	94240421	1		1		PC	CAP FXD CER 82PF 10P 50VDCW	P						
	130	01	94356324	7		2		PC	INDUCTOR 10 MH	P						
	131	01	94402148	4		2		PC	RES FXD C FM 470 OHM 5P 1/4W	P						

BUILD ARC 214

ASSEMBLY PARTS LIST

PRINT DATE	PAGE	FILE CHANGE NO
03-09-83	6	00015771

DIV	ASSEMBLY NUMBER	CO	REV.	DWG.	DESCRIPTION	MC	STATUS	STATUS DATE	ENG. DESP.	FILE DATE
0860	90446284	3	E	D	REPLACED BY 90446570 15771	N	INA	03-04-83	FA501A	03-09-83

T	FIND NO	LI	PART NUMBER	CO	M	QUANTITY		U/M	PART DESCRIPTION	MC	YLD	ECO. NO. IN	ECO. NO OUT	S/N	WK IN	WK OUT
	132	01	15101108	7		1		PC	DIO 1N751A 400MW ZEN VR 5.1V	P						
	133	01	51850400	6		1	083	FT	CABLE RAD/FRQ 26GA STRD RG	W						
	135	01	51873600	4			015	DZ	VARNISH INSUL RED GLPT	B						
	136	01	24501801	5			333	FT	WIRE, BUSS 22AWG SOLID CU/SN	W		14965			8204	
									0109 TOTAL LINES							

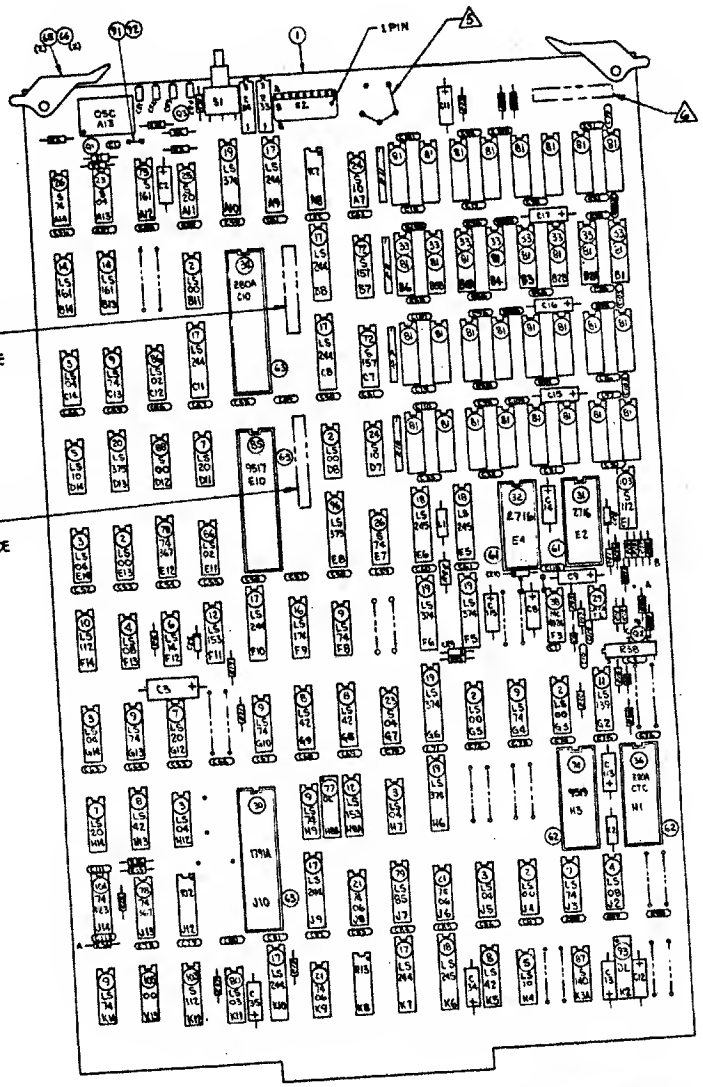

CROSS REFERENCE TABLE	
FIND NUMBER	REFERENCE DESIGNATION
37	OSC
39	S2
41	R3
42	R2,R4
44	R1
47	R5,R6
48	R13
51	C36 THRU C61, C63 THRU C76, C78 THRU C98, C118
53	C8,C9,C12,C13,C34,C35
54	C11, C14,C15,C16,C17,C113,C115
55	C3
56	C1
57	CR1, CR2, CR3, CR4
58	CR5 CR9, CR10, CR11
59	Q1,Q3
60	S1
69	C2
70	R8,R9,R10,R11
75	C18 THRU C33 C99 THRU C110
82	R7,R12
83	R41
90	R19,R19,R21,R23,R25 ~~R26,R27 THRU~~
97	R20
102	C7
106	R33
107	R34
108	R38
110	Q2
111	R16,R17
112	R14,R15
113	R35,R36
114	R28,R29
115	R30,R37
116	R39,R40
117	R43
118	R32
119	R31
120	R42
121	R44
122	C116
124	CR8
125	C5,C6
126	C4,C10
127	C112
129	C111
130	L1,L2
131	R22,R24
132	CR7

CHANGE TABLE	
DELETIONS	ADDITIONS
CUT FOIL:	ADD WIRE SOLDER SIDE
1) K3 B-4 S.S.	1) K4-11 TO K3A-13
2) R42-B S.S.	2) R42-B TO E40-A
3) R33-1 S.S.	3) R40-A TO F2-5
4) R34-A S.S.	4) R38-2 TO F2-6
5) K4-1 S.S.	5) F2-7 TO Q2-B
6) F13-10 S.S.	6) ADD CENTER CONDUCTOR COAX FROM R33-2 TO R36-A
	7) ADD BRAID SHIELD COAX FROM S2-8A TO J14-B
	8) E10-19 TO E10-20
	9) E12-13 TO G7-B
	10) G7-B TO K4-1
	11) F13-B TO F13-10

NOTES:

1. MARK ASSEMBLY NUMBER, REVISION LEVEL AND LOCATION IN AREA SHOWN. MARK PER CDC SPECIFICATION 10121506. CHARACTER HEIGHT .12 (10 POINT), COLOR WHITE.
2. MARK SERIAL NUMBER IN AREA SHOWN PER RVLOPS P & P NO. 80:20:34 AND PER MARKING REQUIREMENTS IN NOTE (1) ONE.
3. FIND NUMBERS, ELEMENT IDENTIFIERS AND REFERENCE DESIGNATIONS ARE FOR REFERENCE ONLY AND DO NOT APPEAR ON PART.
4. AFTER ALIGNING R33, R34, AND R36, SEAL THEM WITH OLYPTAL CDC P/N 51873600.
5. SOLDER 22 GAUGE BUSS WIRE (F/N 138) IN THIS CONFIGURATION.
6. IDENTIFY BOARD TYPE AS 9BED-3 PER SPECIFICATION IN NOTE 1.

SHEET REVISION STATUS							

REVISION RECORD					
REV	ECO	DESCRIPTION	DRW T	DATE	CHKD	APVD
A	S152-44	Released Class "A"				

APL 90446570

DETACHED LISTS

UNLESS OTHERWISE SPECIFIED DIMENSIONS ARE IN TOLERANCES PLACE PLACE ANGLES

MATERIAL

FINISH

DRW. CHKD. ENGR. MFG. APVD. MGR. ECONOMY

FA501A

THIRD ANGLE PROJECTION

CONTROL DATA CORPORATION

TITLE P.C. CARD ASSEMBLY 9BED-3 (DISK CONTROLLER)

SIZE D FSCM NO 15920 DWG NO 90446570

SCALE 2/1 NHA 15632572 SHEET 1 OF 1

BUILD ARC 214

ASSEMBLY PARTS LIST

PRINT DATE	PAGE	FILE CHANGE NO.
02-28-83	1	15152-44

DIV.	ASSEMBLY NUMBER	CD	REV.	DWG	DESCRIPTION	MK	STATUS	STATUS DATE	ENG. RESP	FILE DATE
0860	90446570	5	A	D	CD ASSY 9BED-3	N	REL	02-22-83	FA501A	02-28-83

T	FIND NO	LI	PART NUMBER	CD	AL	QUANTITY	U/M	PART DESCRIPTION	MK	YLD	ECO. NO. IN	ECO. NO. OUT	S/N	WK IN	WK OUT
	001	01	90446259	5		1	PC	PW BD 9BED	P						
	002	01	15144900	6		6	PC	IC 74LS00 140LS 77L 4 21N NND	P						
	003	01	15145100	2		6	PC	IC T4LS04 146LS TTL HEX 1NVTR	P						
	004	01	15145400	6		2	PC	IC 74LS08 201LS 77L 4 21N AND	P						
	005	01	15145600	1		2	PC	IC 74LS10 141LS T7L 3 31N NND	P						
	006	01	15148500	0		1	PC	IC 74LS14 943LS 77L HEX NAND	P						
	007	01	15145900	5		3	PC	IC 74LS20 208LS T7L 2 41N NND	P						
	008	01	15147600	9		4	PC	IC 7YPE T4L542	P						
	009	01	15146300	7		8	PC	IC 74LS74 175LS TTL 2 D F/F	P						
	010	01	15146500	2		1	PC	IC 74LS112 243LS 7TL DUAL F/F	P						
	011	01	15146600	0		1	PC	IC T4LS139 53ALS DECODDER 10F4	P						
	012	01	15148700	6		2	PC	IC 74LS153 TTL DUAL 41/P	P						
	014	01	15146800	6		2	PC	IC 74LS161 156LS TTL 4B CNTR	P						
	016	01	95965100	1		1	PC	IC T4LS174 681T LATCH	P						
	017	01	15163414	4		8	PC	IC 74LS244 TTL B 3-STATE DRVR	P						
	018	01	15163324	5		3	PC	IC T4LS245 TTL B BUS XCEIVER	P						
	019	01	15163404	5		5	PC	IC 74LS374 TTL 8 D FLIP/FLOP	P						
	020	01	15163232	0		1	PC	IC 74LS375 7TL 4-BIT	P						
	021	01	96744155	1		3	PC	IC 7406 DRVR HEX 1NV BUFFER	P						
	023	01	88883700	2		2	PC	IC T4504 1465 TTL HEX 1NVTR	P						
	024	01	88884200	2		2	PC	IC 74510 1415 TTL 3 3-1N NAND	P						

BUILD ARC 214

ASSEMBLY PARTS LIST

PRINT DATE	PAGE	FILE CHANGE NO.
02-28-83	2	15152-44

DIV.	ASSEMBLY NUMBER	CD	REV	DWG	DESCRIPTION	MK	STATUS	STATUS DATE	ENG. RESP.	FILE DATE
0860	90446570	5	A	D	CD ASSY 9BED-3	N	REL	02-22-83	FA501A	02-28-83

T	FIND NO	LI	PART NUMBER	CD	AL	QUANTITY	U/M	PART DESCRIPTION	MK	YLD	ECO. NO. IN	ECO. NO. OUT	S/N	WK IN	WK OUT
	025	01	88885300	9		1	PC	IC T4S20 208S T7L 2 4-1N NAND	P						
	026	01	88923000	9		2	PC	IC 74ST4 1755 77L 2 D-7YP F-F	P						
	029	01	151ST100	T		1	PC	IC LM358N 344 DUAL DP-AMP	P						
	030	01	15163444	1		1	PC	IC FD1791	P						
	031	01	66312070	7		1	PC	FLEX DISK CDDED E-RDM	G						
	032	01	66312071	5		1	PC	FLEX DISK CDDED E-ROM	G						
	033	01	15153821	2		8	PC	IC 4116 MDS 16384-81T RAM	P						
	034	01	15163201	5		1	PC	IC Z80A MDS 881T RROCESSOR	P						
	036	01	15164429	1		1	PC	IC Z80A-CTC SILICDN GATE NMOS	P						
	037	01	51904109	9		1	PC	DSC, T7L DIP 16.000MHZ 500HW	P						
	038	01	15105T00	7		1	PC	IC 4024 S02 TTL DL/V CONT HVB	P						
	039	01	83482230	2		1	PC	SWITCH DUAL BPDS .08 F18 2	P						
	041	01	94402116	1		1	PC	RES FXD C FM 22 OHM 5P 1/4W	P						
	042	01	94402140	1		2	PC	RES FXD C FM 220 OHM 5P 1/4W	P						
	044	01	94402157	5		1	PC	RES FXD C FM 1.1K OHM 5P 1/4W	P						
	047	01	94402180	7		2	PC	RES FXD C FM 10K OHM 5P 1/4W	P						
	048	01	95A94500	8		1	PC	RES MOD 16 PINS 20 RESISTORS	P						
	051	01	19115400	4		42	PC	CAP FXD CER .01UF +80-20P 50V	P						
	053	01	24504333	6		6	PC	CAP FXD TANT 2.2UF 20P 35VDCW	P						
	054	01	24504369	0		7	PC	CAP FXD TANT 10UF 20P 15VDCW	P						
	055	01	24504373	2		1	PC	CAP FXD TANT 47UF 20P 15VDCW	P						

BUILD ARC 214

ASSEMBLY PARTS LIST

PRINT DATE	PAGE	FILE CHANGE NO
02-28-83	3	15152-44

DIV.	ASSEMBLY NUMBER	CD	REV.	DWG.	DESCRIPTION	MC	STATUS	STATUS DATE	DWG. RESP.	FILE DATE
0860	90446570	5	A	D	CD ASSY 9BED-3	N	REL	02-22-83	FA501A	02-28-83

T	FIND NO	LI	PART NUMBER	CD	M	QUANTITY	U/M	PART DESCRIPTION	MC	VLD	ECO. NO. IN	ECO. NO. OUT	S/N	WK IN	WK OUT
	056	01	75807677	5		1	PC	CAP CER 33PF 5P	P						
	057	01	19171201	7		4	PC	LIGHT IND	P						
	058	01	51007305	1		4	PC	DIO IN4148 SIL MICRO 30V 10MA	P						
	059	01	51714000	0		2	PC	XSTR, 2N2907 BI-POLAR PNP SI	P						
	060	01	51946524	5		1	PC	SWITCH PUSH BUTTON RT ANGLE	P						
	061	01	51848404	3		2	PC	SOCKET, IC 24-POS DIL F-1 SN	P						
	062	01	51848405	0		2	PC	SOCKET, IC 28-POS DIL F-1 SN	P						
	063	01	51848406	8		3	PC	SOCKET, IC 40-POS DIL F-1 SN	P						
	065	01	82311900	3		2	PC	INJECTOR-EJECTOR, NATURAL PCB	P						
	066	01	93533116	1		2	PC	ROLLPIN, .125D X .250L STL ZP	B						
	069	01	24504320	3		1	PC	CAP FXD TANT 33UF 20P 6VDCW	P						
	070	01	94375122	2		4	PC	RES 8S1P NTWK 470HM 3P	P						
	072	01	15117400	0		2	PC	IC TTL 8MUX 2-1 A 1095 DIC16	P						
	073	01	15150400	8		1	PC	IC 93516 TTL 481T	P						
	074	01	15163459	9		1	PC	IC 9519 INT CONT	P						
	075	01	94354826	3		28	PC	CAP FXD CER 0.10UF 50V	P						
	077	01	51918283	6		1	PC	DELAY LINE TAP 100 OHM F18 5	P						
	078	01	15140400	1		2	PC	IC DM 8097 HEX BUFFER TRI STA	P						
	079	01	15147200	8		1	PC	IC 74LS85 COMP TTL 4 BIT	P						
	080	01	15145200	0		1	PC	IC 74LS03 20ZLS TTL4 2-1 NAND	P						
	081	01	51848401	9		32	PC	SOCKET, IC 16-PDS DIL F-1 SN	P						

BUILD ARC 214

ASSEMBLY PARTS LIST

PRINT DATE	PAGE	FILE CHANGE NO.
02-28-83	4	15152-44

DIV.	ASSEMBLY NUMBER	CD	REV	DWG	DESCRIPTION	MC	STATUS	STATUS DATE	DWG. RESP.	FILE DATE
0860	90446570	5	A	D	CD ASSY 9BED-3	N	REL	02-22-83	FA501A	02-28-83

T	FIND NO	LI	PART NUMBER	CD	M	QUANTITY	U/M	PART DESCRIPTION	MC	VLD	ECO. NO. IN	ECO. NO. OUT	S/N	WK IN	WK OUT
	082	01	75738666	9		2	PC	RES 16PIN DIP 10K R 2P 1.5W 2	P						
	083	01	94402141	9		1	PC	RES FXD C FM 240 OHM 5P 1/4W	P						
	085	01	15163458	1		1	PC	IC 9517A MULTIMODE DMA CONT	P						
	086	01	15145000	4		2	PC	IC 74LS02 14BLS TTL 4 2IN NOR	P						
	087	01	15158700	3		1	PC	IC 745140 TTL 2 4IN NAND BFR	P						
	088	01	88884500	5		1	PC	IC 74500 1405 TTL 4 2-1N NAND	P						
	090	01	94402156	7		8	PC	RES FXD C FM 1.0K OHM 5P 1/4W	P						
	091	01	51903400	3		2	PC	PIN, .025 IN SQ PC M70 2A	P						
	092	01	77612624	5		1	PC	CONNECTOR, JUMPER	P						
	093	01	51918281	0		1	PC	DELAY LINE TAP 200 OHM F18 3	P						
	094	01	90446258	7		REF	PC	SCH DIAG 9BED	D						
	095	01	16033200	3		REF	PC	FAB SPEC, MULTI-LAYER PWB	D						
	096	01	15163434	2		1	PC	IC 74LS373 8 D XPARENT LATCH	P						
	097	01	94402168	2		1	PC	RES FXD C FM 3.3K OHM 5P 1/4W	P						
	102	01	94227227	9		1	PC	CAP 110 PF DIPPED MICA	P						
	103	01	15158600	5		2	PC	IC 745112 2435 TTL 2 J-K F/F	P						
	104	01	50254300	2		1	PC	IC 74123 193 TTL 2 RETGR MVB	P						
	105	01	66299099	3		1	PC	IC 7400 TTL QUAD 2-1N NAND	P						
	106	01	51908710	0		1	PC	RES CERM VAR 20K OHM 10P 3/4W	P						
	107	01	51908709	2		1	PC	RES VAR 10K OHM	P						
	108	01	51908708	4		1	PC	RES CER VAR 5K OHM 10P 3/4W	P						

BUILD ARC 214

ASSEMBLY PARTS LIST

PRINT DATE	PAGE	FILE CHANGE NO
02-28-83	5	15152-44

DIV	ASSEMBLY NUMBER	CD	REV	DWG	DESCRIPTION	MC	STATUS	STATUS DATE	ENG. RESP.	FILE DATE
0860	90446570	5	A	D	CD ASSY 9BED-3	N	REL	02-22-83	FA501A	02-28-83

T	FIND NO	LI	PART NUMBER	CD	M	QUANTITY	U/M	PART DESCRIPTION	MC	YLD	ECO. NO. IN	ECO. NO. OUT	S/N	WK IN	WK OUT
	110	01	51003092	7		1	PC	XSTR, 2N2222 HI-SPEED NPN SI	P						
	111	01	94360304	3		2	PC	RES FXD FM 1100 OHM 1P 1/4W	P						
	112	01	94360352	2		2	PC	RES FXD FM 3480 OHM 1P 1/4W	P						
	113	01	94402173	2		2	PC	RES FXD C FM 5.1K OHM 5P 1/4W	P						
	114	01	94402164	1		2	PC	RES FXD C FM 2.2K OHM 5P 1/4W	P						
	115	01	94360400	9		2	PC	RES FXD FM 10.0K OHM 1P 1/4W	P						
	116	01	94402166	6		2	PC	RES FXD C FM 2.7K OHM 5P 1/4W	P						
	117	01	94402158	3		1	PC	RES FXD C FM 1.2K OHM 5P 1/4W	P						
	118	01	94402154	2		1	PC	RES FXD C FM 820 OHM 5P 1/4W	P						
	119	01	94402139	3		1	PC	RES FXD C FM 200 OHM 5P 1/4W	P						
	120	01	94402161	7		1	PC	RES FXD C FM 1.6K OHM 5P 1/4W	P						
	121	01	24500144	1		1	PC	RES FXD COMP 160 OHM 5P 1/2W	P						
	122	01	94842154	0		1	PC	CAP FXD CER .001UF 10P 1000V	P						
	124	01	15101109	5		1	PC	D10 1N752A 400MW ZEN VR 5.6V	P						
	125	01	94227253	5		2	PC	CAP 1300 PF DIPPED MICA	P						
	126	01	94354824	8		2	PC	CAP CER 0.047 UF TYPE 1 20P	P						
	127	01	94240423	7		1	PC	CAP FXD CER 150PF 10P 50VDCW	P						
	129	01	94240421	1		1	PC	CAP FXD CER 82PF 10P 50VDCW	P						
	130	01	94356324	7		2	PC	INDUCTOR 10 MH	P						
	131	01	94402148	4		2	PC	RES FXD C FM 470 OHM 5P 1/4W	P						
	132	01	15101106	7		1	PC	D10 1N751A 400MW ZEN VR 5.1V	P						

BUILD ARC 214

ASSEMBLY PARTS LIST

PRINT DATE	PAGE	FILE CHANGE NO
02-28-83	6	15152-44

DIV	ASSEMBLY NUMBER	CD	REV	DWG	DESCRIPTION	MC	STATUS	STATUS DATE	ENG. RESP.	FILE DATE
0860	90446570	5	A	D	CD ASSY 9BED-3	N	REL	02-22-83	FA501A	02-28-83

T	FIND NO	LI	PART NUMBER	CD	M	QUANTITY	U/M	PART DESCRIPTION	MC	YLD	ECO. NO. IN	ECO. NO. OUT	S/N	WK IN	WK OUT
	133	01	51850400	6		1.083	FT	CABLE RAD/FRQ 26GA STRD RG	W						
	135	01	51873600	4		.015	OZ	VARNISH INSUL RED GLPT	B						
	136	01	24501801	5		333	FT	WIRE, BUSS 22AWG SOLID CU/SN	W						
								0108 TOTAL LINES							

DWN	W. Glaser	11/81	CONTROL DATA	TITLE	CARD ASSEMBLY 9BED CONT MODULE W/FULL MEMORY	PREFIX	DOCUMENT NO.	REV.
CHKD						A	90446396	C
ENG				FIRST USED ON	FA501C/D	NHA 15632982 15632983	SHEET 1 OF 2	
MFG								
APPR			CODE IDENT 15920					
EC								

SHEET REVISION STATUS

2	1
A	A
B	B
C	C

REVISION RECORD

REV	ECO	DESCRIPTION	DRFT	DATE	APP
A	13920-68	RELEASED CLASS A	—	12-18-81	[illegible]
B	15229	REVISED PER ECO	EE	6/4/82	[illegible]
C	15771	INACTIVE, REPLACED BY 90446571	EE	5/1/83	[illegible]

INACTIVE

NOTES:

1. Mark "Assy 90446396" in area shown per CDC SPEC 10121508.
2. Mount F/N 2 in sockets located at A1-A6,C1-C6, and D1-D6 on F/N 1.

APL 90446396

DETACHED LISTS

CONTROL DATA CORPORATION

CODE IDENT	SHEET		DOCUMENT NO.	REV.
15920	2	A	90446396	C

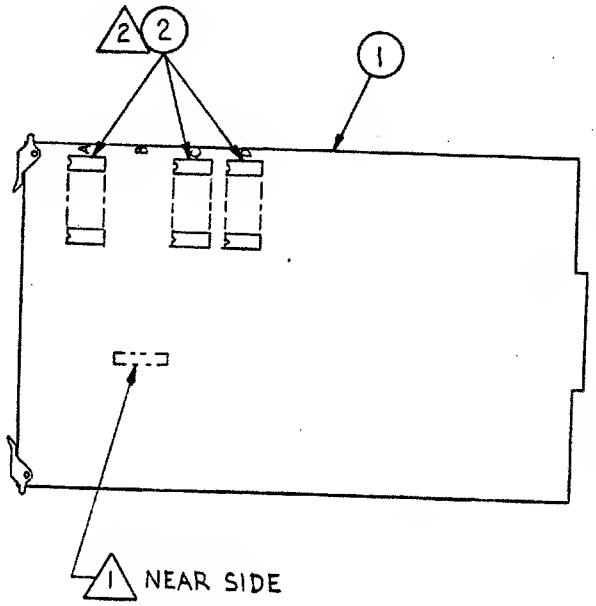

BUILD ARC 214

ASSEMBLY PARTS LIST

PRINT DATE	PAGE	FILE CHANGE NO.
03-09-83	1	00015771

DIV	ASSEMBLY NUMBER	CD	REV.	DWG.	DESCRIPTION	MC	STATUS	STATUS DATE	ENG. RESP.	FILE DATE
0860	90446396	5	C	A	REPLACED BY 90446571 15771	S	INA	03-04-83	FA501C/D	03-09-83

T	FIND NO	LI	PART NUMBER	CD	M	QUANTITY	U/M	PART DESCRIPTION	MC	YLD	ECO. NO. IN	ECO. NO. OUT	S/N	WK IN	WK OUT
	001	01	90446284	3		1	PC	REPLACED BY 90446570 15771	N						
	002	01	15153821	2		24	PC	IC 4116 MOS 16384-8IT RAM	P						
	003	01	10121508	5		REF	PC	MARKING• INK STP-STENCIL-S/C	D						
								0003 TOTAL LINES							

DWN	B. Graf	2/83	CONTROL DATA CORPORATION	TITLE CARD ASSEMBLY CONTROLLER MODULE W/FULL MEMORY	PREFIX A	DOCUMENT NO. 90446571	REV. A
CHKD		2-10-83					
ENG		2-11-83					
MFG		2-24-83					
APPR		2-24-83	CODE IDENT 15920	FIRST USED ON FA501C/D	NHA 15632982 15632983	SHEET 1 of 2	
MECH		2-24-83					

SHEET REVISION STATUS

2	1
A	A

REVISION RECORD

REV	ECO	DESCRIPTION	DRFT	DATE	APP
A	15152-45	RELEASED CLASS "A"	/	2-22-83	

NOTES

1. Mark "Assy 90446571" in area shown per CDC SPEC 10121508.
2. Mount F/N 2 in sockets located at A1-A6, C1-C6 and D1-D6 on F/N 1.

APL 90446571

DETACHED LISTS

PRINTED IN U.S.A.

AA3180 REV. 8-71

CONTROL DATA CORPORATION	CODE IDENT 15920	SHEET 2	A	DOCUMENT NO. 90446571	REV. A

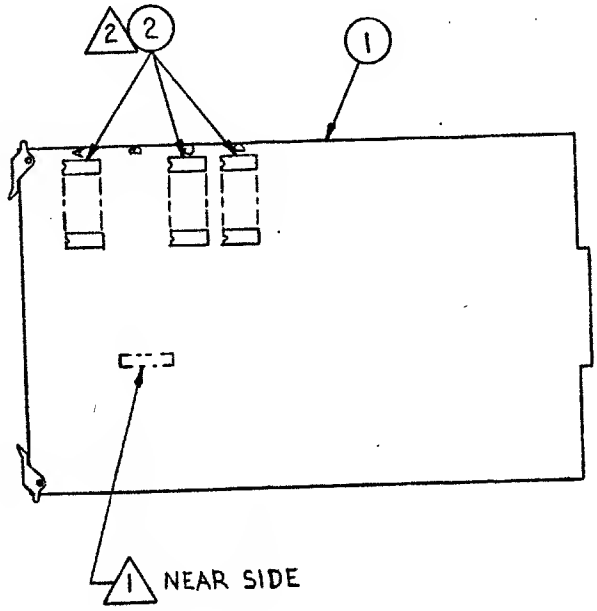

PRINTED IN U.S.A.

BUILD ARC 214

ASSEMBLY PARTS LIST

PRINT DATE	PAGE	FILE CHANGE NO
02-28-83	1	15152-45

DIV.	ASSEMBLY NUMBER	CD	REV.	DWG.	DESCRIPTION	MC	STATUS	STATUS DATE	ENG RESP.	FILE DATE
0060	90446571	3	A	A	CD ASSY CONT MOD W/FULL MEM	S	REL	02-22-83	FA501C/D	02-28-83

T	FIND NO	LI	PART NUMBER	CD	M	QUANTITY	U/M	PART DESCRIPTION	MC	TLB	ECO. NO. IN	ECO. NO. OUT	S/N	WE IN	WE OUT
	001	01	90446570	5		1	PC	CD ASSY 9BED-3	N						
	002	01	15153821	2		24	PC	IC 4116 MOS 16384-BIT RAM	P						
								0002 TOTAL LINES							

SHEET REVISION STATUS	REV	ECO	DESCRIPTION	DRFT	DATE	CHKD	APP
	00	[illegible]	RELEASED CLASS B	—	[illegible]	—	[illegible]
	03	51071	REVISED & REDRAWN	WJG	[illegible]	WJG	[illegible]
	04	51109	F/N 88 WAS 94842187	DS	[illegible]	WJG	[illegible]
	05	51125	ADD NOTE 7, DELETE F/N 44	WJG	[illegible]	[illegible]	[illegible]
	A	[illegible]	RELEASED CLASS A	/	[illegible]	[illegible]	[illegible]
	B	14279	F/N 83 WAS 94850716	WJH	[illegible]	[illegible]	[illegible]
	C	14595	[illegible]	WJG	[illegible]	WJG	[illegible]
	D	14623	CHG F/N 23	WJG	[illegible]	WJG	[illegible]
	E	14838	INACTIVE, SERVICE USE ONLY REPLACED BY 90446290	EE	[illegible]	EE	[illegible]

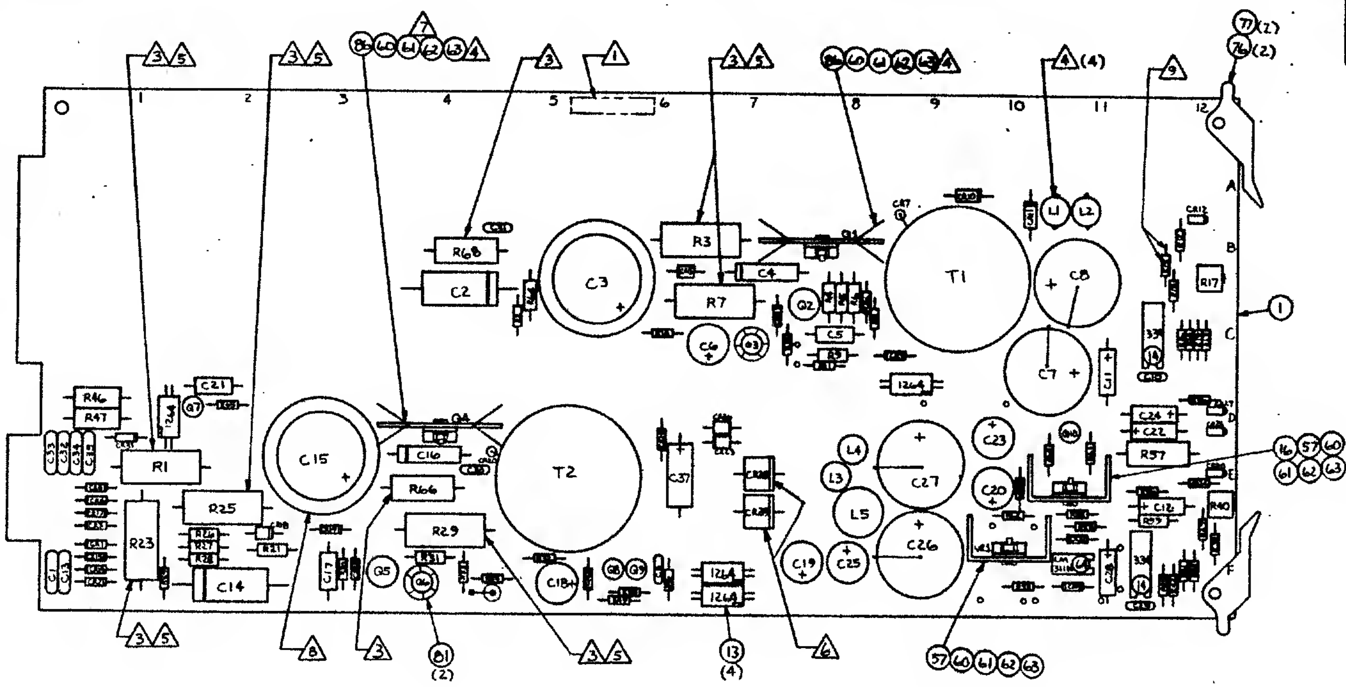

NOTES:

1. APPLY ASSY NO., REV LEVEL, LOC CODE, AND DATE CODE IN AREA SHOWN. MARK PER CDC SPEC 10121508; CHARACTER HEIGHT .12 (12 PT) COLOR WHITE.
2. FIND NUMBERS, ELEMENT IDENTIFIERS, AND REFERENCE DESIGNATIONS ARE FOR REFERENCE ONLY AND DO NOT APPEAR ON PART.
3. MOUNT RESISTORS .350 INCH OFF BOARD. USE TUBING F/N 82 .60 INCH ON EACH LEAD.
4. APPLY F/N 83 BETWEEN COMPONENT SIDE OF BOARD & L1, L2, L3 & L4 TO KEEP STATIONARY. APPLY F/N 83 TO PROTRUDING TABS (2) ON F/N 86 ON SOLDER SIDE OF P.C.B. (2 PLACES).
5. RESISTORS TO BE INSTALLED WITH PROTRUSION TOWARD THE BOARD.
6. MOUNT DIODES .300 MIN .500 MAX OFF P.C. BOARD.
7. BEND HEAT SINK FIN STRAIGHT TO KEEP FROM SHORTING TO CR20. (2nd F/N FROM BOTTOM)
8. CAPACITOR C15 MUST BE MOUNTED VERTICAL, (PERPENDICULAR TO BOARD PLANE.
9. RESISTOR R15 MUST BE MOUNTED APPROX. .25 INCH FROM BOARD SURFACE, SEE DETAIL. ONE RESISTOR LEG FACING NUMERICS ON BOARD TO BE RAISED.

CHANGE TABLE	
DELETIONS	ADDITIONS

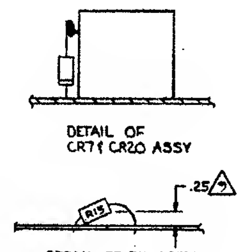

DETAIL OF CR7 & CR20 ASSY

DETAIL OF R15 ASSY

CROSS REFERENCE TABLE

FIND NO	REFERENCE DESIGNATION	FIND NO	REFERENCE DESIGNATION	FIND NO	REFERENCE DESIGNATION
2	T1	28	C9, C10, C29	63	R80
3	T2	29	C30, C31	66	R49, R55
4	Q1, Q4	31	C11, C12, C22, C24, C28	67	R56
5	Q2, Q5	33	R61	68	CR33
6	Q3, Q6, Q7, Q8, Q10	34	R46, R47	70	R58
7	Q9	35	R1, R23	71	R57
8	CR1 THRU CR4, CR6, CR9, CR14 THRU CR17, CR19, CR22, CR31, CR35	36	R3, R25	72	C19, C36
		37	R4, R5, R6, R26, R27, R28	73	R21, R64
		38	R7	76	R9, R31
9	CR5, CR7, CR18, CR20, CR23, CR26	39	R8, R11, R14, R16, R30, R33, R54	79	R19, R44
10	CR28, CR29	40	R10, R32	80	CR10, CR11
11	CR12, CR25, CR27, CR30	41	R51, R53	84	CR8, CR21
12	CR24, CR32	42	R39	85	C21
15	CR13	43	R2, R24	87	R29
17	VR1	45	R60	86	C34, C35
18	L1, L2, L3, L4	46	R20, R45	89	C37
19	L5	47	R62		
20	C3, C15	48	R66, R68		
21	C2, C14	49	R12		
22	C4, C16	50	R13, R16, R41, R42		
23	C5, C17, C38	51	R17, R40		
24	C6, C18, C20, C25	52	R35		
25	C1, C13, C32, C33	53	R36		
26	C7, C8	54	R52		
27	C26, C27	56	R63		
		58	R15		

INACTIVE

APL 90446140	DETACHED LISTS	UNLESS OTHERWISE SPECIFIED DIMENSIONS ARE IN INCHES. TOLERANCES: 2 PLACE ±? 3 PLACE ±? ANGLES ±?	DO NOT SCALE DRAWING		FA501-A/B	TITLE: P.C. CARD ASSEMBLY, 9BKD
				DRAWN BY	W.J. [illegible] 5-9-80	CODE IDENT 15920
				CHECKED BY	R. KAHT 5-10-80	SIZE D
					[illegible] 5-13-80	DRAWING NO 90446140
				APPROVED	[illegible]	SCALE NONE
						15632209
						SHEET 1 OF 1

BUILD ARC 210

ASSEMBLY PARTS LIST

PRINT DATE	PAGE	FILE CHANGE NO
10-01-81	1	00014838

DIV	ASSEMBLY NUMBER	CD.	REV.	DWG.	DESCRIPTION	MC	STATUS	STATUS DATE	ENG. RESP.	FILE DATE
0860	90446140	7	E	D	REPLACED BY 90446290 14838	A	INA	09-23-81	FA501A/B	10-01-81

T	FIND NO.	LI	PART NUMBER	CD	M	QUANTITY	U/M	PART DESCRIPTION	MC	YLD	ECO. NO. IN	ECO. NO. OUT	S/N	WK IN	WK OUT
	001	01	90446139	9		1	PC	PW BD 9BKO PWR 5PLY	P						
	002	01	51940599	T		1	PC	TRANSFORMER FLYBACK 25KHZ	P						
	003	01	51940598	9		1	PC	TRANSFORMER FLYBACK 25KHZ	P						
	004	01	51918111	9		2	PC	XSTR NPN 400V BA TO 220	P						
	005	01	51681100	T		2	PC	XSTR 2N5189 NPN SIL	P						
	006	01	51003092	T		5	PC	XSTR 2N2222 HI SPEED NPN SIL	P						
	007	01	51714000	0		1	PC	XSTR 2N2907 PNP SIL	P						
	008	01	95637304	7		14	PC	DIO IN4004 400PIV SIL 1.1V/1A	P						
	009	01	95691500	3		6	PC	RECT. 1N5615 F-R SIL 1 AMP	P						
	010	01	77835261	7		2	PC	POWER DIODE FAST RECOVER	P						
	011	01	191T1201	7		4	PC	LIGHT IND	P						
	012	01	15101110	3		2	PC	DIO 1N753A 400MW ZEN VR 6.2V	P						
	013	01	15165538	8		4	PC	ISOLATOR OPTICALLY COUPLED	P						
	014	01	51718400	8		2	PC	IC T23C 334 VOLTAGE REGULATOR	P						
	015	01	51007385	1		1	PC	DIO 1N4148 10MA MICRO SIL 30V	P						
	016	01	15163403	7		1	PC	IC LM317 ADJ +V RGLTR TO-220	P						
	017	01	15151400	T		1	PC	IC UA7900-5 356A NEG V RGLTR	P						
	018	01	51918616	T		4	PC	INDUCTOR	P						
	019	01	51918617	5		1	PC	INDUCTOR	P						
	020	01	51918627	4		2	PC	CAP ALUM ELECT 300UF 250V 1SP	P						
	021	01	24504816	8		2	PC	CAP FXD MYL .33UF 10P 100VDCW	P						

BUILD ARC 210

ASSEMBLY PARTS LIST

PRINT DATE	PAGE	FILE CHANGE NO.
10-01-81	2	00014838

DIV	ASSEMBLY NUMBER	CD.	REV	DWG.	DESCRIPTION	MC	STATUS	STATUS DATE	ENG. RESP.	FILE DATE
0860	90446140	T	E	D	REPLACED BY 90446290 14838	A	INA	09-23-81	FA501A/B	10-01-81

T	FIND NO.	LI	PART NUMBER	CD	M	QUANTITY	U/M	PART DESCRIPTION	MC	YLD	ECO. NO. IN	ECO. NO. OUT	S/N	WK IN	WK OUT
	022	01	36180T53	0		2	PC	CAP FXD MYL .001MFD 600V	P						
	023	01	51839147	9		2	PC	CAP FXD CER .100UF 10P 100VDC	P			14523			8106
	023	02	51839147	9		3	PC	CAP FXD CER .100UF 10P 100VDC	P		14523			8106	
	024	01	95691133	3		4	PC	CAP ELEC 270UF -10+100P 25VDC	P						
	025	01	94842168	0		4	PC	CAP FXD CER .0033UF GMV 1000V	P						
	026	01	94397161	4		2	PC	CAP AL ELECT 560UF OHM 75V	P						
	027	01	94397162	2		2	PC	CAP AL ELECT 5600UF OHM 12V	P						
	028	01	51001120	8		3	PC	CAP CER F-2 .01UF +80-20P 25V	P						
	029	01	94842145	8		2	PC	CAP FXD CER 500PF 20P 1K	P						
	031	01	24504333	6		5	PC	CAP FXD TANT 2.2UF 20P 35VDCW	P						
	033	01	94360236	7		1	PC	RES FXD FM 237 OHM 1P 1/4W	P						
	034	01	24507181	6		2	PC	RES FXD COMP 5600 OHM 5P 1W	P						
	035	01	95596503	3		2	PC	RES FXD WW 4.3 OHM 10P 5WATT	P						
	036	01	95596520	7		2	PC	RES FXD WW 600 OHM 10P 5WATT	P						
	037	01	65019518	3		6	PC	RES CARB COMP 1/2W 1.3 OHMS	P						
	038	01	95596511	6		1	PC	RES FXD WW 43 OHM 10P 5WATT	P						
	039	01	94402159	1		7	PC	RES FM 1.3K OHM 1/4 W CARBON	P						
	040	01	94402172	4		2	PC	RES FM 4.7K OHM 1/4W CARBON	P						
	041	01	94402148	4		2	PC	RES FM 470 OHM 1/4W CARBON	P						
	042	02	94402166	6		1	PC	RES FM 2.7K OHM 1/4W CARBON	P						
	043	01	94402220	1		2	PC	RES FM 470K OHM 1/4W CARBON	P						

BUILD ARC 210

ASSEMBLY PARTS LIST

PRINT DATE	PAGE	FILE CHANGE NO.
10-01-81	3	00014838

DIV	ASSEMBLY NUMBER	CD.	REV.	DWG.	DESCRIPTION	MC	STATUS	STATUS DATE	ENG. REP.	FILE DATE
0860	90446140	T	E	D	REPLACED BY 90446290 14838	A	INA	09-23-81	FA501A/B	10-01-81

T	FIND NO.	U	PART NUMBER	CD	M	QUANTITY		U/M	PART DESCRIPTION	MC	TLD	ECO. NO. IN	ECO. NO. OUT	S/N	WK IN	WK OUT
	045	01	94402160	9		1		PC	RES FM 1.5K OHM 1/4W CARBON	P						
	046	01	94402110	4		2		PC	RES FM 12 OHM 1/4W CARBON	P						
	047	01	94360331	6		1		PC	RES FXD FM 2100 OHM 1P 1/4W	P						
	048	01	24504839	2		2		PC	RES FXD COMP 100 OHM 5P 2WATT	P						
	049	01	94402176	5		1		PC	RES FM 6.8K OHM 1/4W CARBON	P						
	050	01	94402167	4		4		PC	RES FM 3K OHM 1/4W CARBON	P						
	051	01	51918846	0		2		PC	RES VAR CER 1K OHM 20P 1/2W	P						
	052	01	94402155	9		1		PC	RES FM 910OHM 1/4W CARBON	P						
	053	01	94402165	8		1		PC	RES FM 2.4K OHM 1/4W CARBON	P						
	054	01	24500148	2		1		PC	RES FXD COMP 240 OHM 5P 1/2W	P						
	056	01	94402180	7		1		PC	RES FM 10K OHM 1/4W CARBON	P						
	057	01	51918101	0		2		PC	HT/SK PLSTC SEMI FIG1 AND2	P						
	058	01	94402179	9		1		PC	RES FM 9.1K OHM 1/4W CARBON	P						
	060	01	51003962	1			001	OZ	PASTE, HEAT XFR CMPO NON-CONO	B						
	061	01	10127103	9		4		PC	MSCR PAN PHL 4-40X.312 STL ZP	B						
	062	01	10126400	0		4		PC	WSHR, NO.4 EXT/T LK STL ZP	B						
	063	01	10125103	1		4		PC	NUT, HEX 4-40 MSCR STL ZP	B						
	064	01	15163443	3		1		PC	IC LM311N VOLT COMP HI IMP	P						
	065	01	94402122	9		1		PC	RES FM 390OHM 1/4W CARBON	P						
	066	01	94402132	8		2		PC	RES FM 100 OHM 1/4W CARBON	P						
	067	01	94360100	5		1		PC	RES FXD FM 10 OHM 1P 1/4W	P						

BUILD ARC 210

ASSEMBLY PARTS LIST

PRINT DATE	PAGE	FILE CHANGE NO.
10-01-81	4	00014838

DIV	ASSEMBLY NUMBER	CD.	REV.	DWG.	DESCRIPTION	MC	STATUS	STATUS DATE	ENG. REP.	FILE DATE
0860	90446140	T	E	D	REPLACED BY 90446290 14838	A	INA	09-23-81	FA501A/B	10-01-81

T	FIND NO.	U	PART NUMBER	CD	M	QUANTITY		U/M	PART DESCRIPTION	MC	TLD	ECO. NO. IN	ECO. NO. OUT	S/N	WK IN	WK OUT
	068	01	15101107	9		1		PC	DIO 1N750A 400MW ZEN VR 4.7V	P						
	069	01	16006500	9		REF		PC	FABRICATION SPECIFICATION	O						
	070	01	94360262	3		1		PC	RES FXD FM 442 OHM 1P 1/4W	P						
	071	01	51903001	9		1		PC	RES FXD WW .02 OHM 5P 2WATT	P						
	072	01	95691135	8		2		PC	CAP ELEC 470UF -10+100P 25VDC	P						
	073	01	17720519	2		2		PC	RES FXD COMP 0.2MEG .5W 5P	P						
	075	01	90446138	1		REF		PC	SCH DIAG 9BKO PWR SPLY	D						
	076	01	82311900	3		2		PC	INJECTOR-EJECTOR, NATURAL PCB	P						
	077	01	93533118	1		2		PC	ROLLPIN, .1250 X .250L STL ZP	B						
	078	01	24500131	8		2		PC	RES FXD COMP 47 OHM 5P 1/2W	P						
	079	01	94402144	3		2		PC	RES FM 330 OHM 1/4W CARBON	P						
	080	01	95691506	0		2		PC	RECT, 1N5416 F-R SIL 3 AMP	P						
	081	01	51719600	2		2		PC	HEAT SINK ELCTRN COMP FAN TOP	P						
	082	01	51797418	4		1		FT	TBG INS .059 DIA T/W	B						
	083	01	94850716	5			050	OZ	SEAL, 3M (4400)	B			14279			8040
	083	02	62019900	0			050	OZ	EPOXY, 2-PART 5-MINUTE CLEAR	B		14279			8040	
	084	01	12081500	6		2		PC	DIO SIL SCHOTTKY PWR .55V/1A	P						
	085	01	51839124	8		1		PC	CAP FXD CER 1000PF 10P 100VDC	P						
	086	01	51906601	3		2		PC	HT SINK, SEMI FIG 3 ALUM BLK	P						
	087	01	95596512	4		1		PC	RES FXD WW 51 OHM 10P 5W	P						
	088	01	94842184	7		2		PC	CAP FXD CER .02UF +80-20P 1K	P						

BUILD ARC 210

ASSEMBLY PARTS LIST

PRINT DATE	PAGE	FILE CHANGE NO.
10-01-81	5	00014838

DIV	ASSEMBLY NUMBER	CD.	REV.	DWG	DESCRIPTION	MC	STATUS	STATUS DATE	ENG. REP.	FILE DATE
0860	90446140	7	E	D	REPLACED BY 90446290 14838	A	INA	09-23-81	FA501A/B	10-01-81

T	FIND NO.	U	PART NUMBER	CD	M	QUANTITY		U/M	PART DESCRIPTION	MC	YLD	ECO. NO. IN	ECO. NO. OUT	S/N	WK IN	WK OUT
	089	01	24504343	5		1		PC	CAP FXD TANT 15UF 20P 35VDC#	P						
									0085 TOTAL LINES							

90446290

REV	ECO	DESCRIPTION	DRFT	DATE	CHKD	APP
A	3RD4-55	RELEASED CLASS 3				
B	14722	P/L CHG ONLY				
C	14754	P/L CHG ONLY				
D	14769	ADD C29 DESCRIPTION & DWG	WJG		WJG	
E	14774	ADD F/N 92, F/N 31 WAS QTY 4	WJG		WJG	
F	14778	P/L CHG ONLY				
G	14894	CHANGED NOTE 3	EE		EL	
H	14965	INACTIVE, REPLACED BY 90446290	EE		EL	

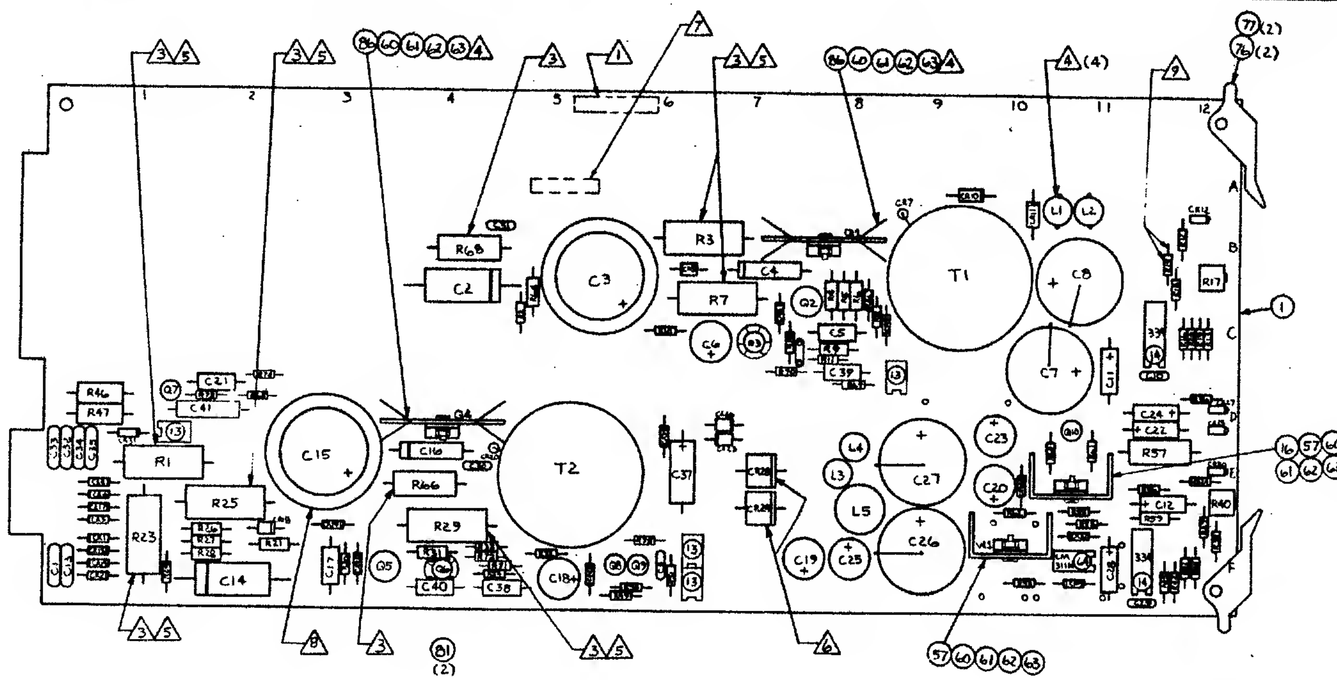

CAPACITOR C15 MUST BE MOUNTED VERTICAL, (PERPENDICULAR TO BOARD PLANE.

RESISTOR R15 MUST BE MOUNTED APPROX. .25 INCH FROM BOARD SURFACE. SEE DETAIL. ONE RESISTOR LEG FACING NUMERICS ON BOARD TO BE RAISED.

NOTES:

1. MARK ASSY NO. AND REVISION LEVEL .12 HIGH, WHITE, IN AREA SHOWN PER CDC SPEC 10121508.
2. FIND NUMBERS, ELEMENT IDENTIFIERS, AND REFERENCE DESIGNATIONS ARE FOR REFERENCE ONLY AND DO NOT APPEAR ON PART.
3. MOUNT RESISTORS .250 MIN .350 MAX OFF BD. USE TUBING F/N 82 .60 INCH ON EACH LEAD.
4. APPLY F/N 83 BETWEEN COMPONENT SIDE OF BOARD & L1, L2, L3 & L4 TO KEEP STATIONARY. APPLY F/N 83 TO PROTRUDING TABS (2) ON F/N 86 ON SOLDER SIDE OF PCB. (2 PLACES).
5. RESISTORS TO BE INSTALLED WITH PROTRUSION TOWARD THE BOARD.
6. MOUNT DIODES .300 MIN .500 MAX OFF P.C. BOARDS.
7. MARK SERIAL NUMBER IN AREA SHOWN PER RVLOPS P&P NO. 80:20:34 AND PER MARKING REQM'TS IN NOTE (1) ONE.

CHANGE TABLE	
DELETIONS	ADDITIONS

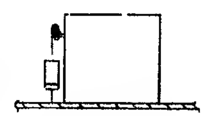

DETAIL OF CR7 & CR20 ASSY

DETAIL OF R15 ASSY

CROSS REFERENCE TABLE

FIND NO	REFERENCE DESIGNATION	FIND NO	REFERENCE DESIGNATION	FIND NO	REFERENCE DESIGNATION
2	T1	28	C9, C10, C29	65	R50
3	T2	29	C30, C31	66	R49, R55
4	Q1, Q4	31	C11, C22, C24, C38	67	R56
5	Q2, Q5	33	R61	68	CR33
6	Q3, Q6, Q7, Q8, Q10	34	R46, R47	70	R58
7	Q9	35	R1, R23	71	R57
8	CR1 THRU CR4, CR6, CR9, CR14 THRU CR17,	36	R3, R25	72	C19, C25
	CR19, CR22, CR31, CR35	37	R4, R5, R6, R26, R27, R28	73	R21, R64
9	CR5, CR7, CR18, CR20, CR23, CR26	38	R7	76	R9, R31
10	CR28, CR29	39	R8, R11, R14, R15, R30, R33, R54	79	R19, R44
11	CR12, CR25, CR27, CR30	40	R10, R32	80	CR10, CR11
12	CR24, CR32	41	R51, R53	84	CR8, CR21
15	CR13	42	R59	85	C21, C41
17	VR1	43	R2, R24, R70, R72, R73, R74, R75	87	R29
18	L1, L2, L3, L4	45	R60	88	C34, C35
19	L5	46	R20, R45	89	C37
20	C3, C15	47	R62	90	R69, R71
21	C2, C14	48	R66, R68	92	C12
22	C4, C16	49	R12		
23	C5, C17, C38, C39, C40	50	R13, R16, R41, R42		
24	C6, C18, C20, C23	51	R17, R40		
25	C1, C13, C32, C33	52	R38		
26	C7, C8	53	R36		
27	C26, C27	54	R39		
		56	R65		
		58	R15		

INACTIVE

APL 90446290

DO NOT SCALE DRAWING

FA501-A/B

P.C. CARD ASSEMBLY, 1AFD

15920 D 90446290

SCALE NONE 15632209 SHEET 1 OF 1

BUILD ARC 210

ASSEMBLY PARTS LIST

PRINT DATE	PAGE	FILE CHANGE NO
01-13-82	1	00014985

DIV.	ASSEMBLY NUMBER	CD	REV	DWG.	DESCRIPTION	MC	STATUS	STATUS DATE	DWG RESP.	FILE DATE
086U	90446290	0	H	0	REPLACED BY 90446443 14985	A	INA	01-08-82	FA501A	01-13-82

T	FIND NO	LI	PART NUMBER	CD	M	QUANTITY	U/M	PART DESCRIPTION	MC	YLD	ECO. NO. IN	ECO. NO. OUT	S/N	WK IN	WK OUT
	001	01	90446289	2		1	PC	REPLACED BY 90446332 14778	P			14778			8143
	001	02	90446332	0		1	PC	PW BD 1AFD PWR SPLY	P		14778			8143	
	002	01	51940599	7		1	PC	TRANSFORMER FLYBACK 25KHZ	P						
	003	01	51940598	9		1	PC	TRANSFORMER FLYBACK 25KHZ	P						
	004	01	51918111	9		2	PC	XSTR NPN 400V 8A TO 220	P						
	005	01	51681100	7		2	PC	XSTR 2N5189 NPN SIL	P						
	006	01	51003092	7		5	PC	XSTR 2N2222 HI SPEED NPN SIL	P						
	007	01	51714000	0		1	PC	XSTR 2N2907 PNP SIL	P						
	008	01	95637304	7		14	PC	DIO IN4004 400PIV SIL 1.1V/1A	P						
	009	01	95691500	3		6	PC	RECT, IN5615 FOR SIL 1 AMP	P						
	010	01	77835261	7		2	PC	POWER DIODE FAST RECOVER	P						
	011	01	19171201	7		4	PC	LIGHT IND	P						
	012	01	50240108	6		2	PC	DIODE SIL ZEN 6.2V IN753A	P						
	013	01	95791300	7		4	PC	OPTICAL ISOLATOR	P						
	014	01	51718400	8		2	PC	IC 723C 334 VOLTAGE REGULATOR	P						
	015	01	51007385	1		1	PC	DIO IN4148 10MA MICRO SIL 30V	P						
	016	01	15163403	7		1	PC	IC LM317 ADJ +V RGLTR TO-220	P						
	017	01	15151400	7		1	PC	IC UA7900-5 356A NEG V RGLTR	P						
	018	01	51918616	7		4	PC	INDUCTOR	P						
	019	01	51918617	5		1	PC	INDUCTOR	P						
	020	01	51918627	4		2	PC	CAP ALUM ELECT 300UF 250V 15P	P						

BUILD ARC 210

ASSEMBLY PARTS LIST

PRINT DATE	PAGE	FILE CHANGE NO.
01-13-82	2	00014985

DIV	ASSEMBLY NUMBER	CD	REV	DWG.	DESCRIPTION	MC	STATUS	STATUS DATE	DWG. RESP.	FILE DATE
086U	90446290	0	H	0	REPLACED BY 90446443 14985	A	INA	01-08-82	FA501A	01-13-82

T	FIND NO	LI	PART NUMBER	CD	M	QUANTITY	U/M	PART DESCRIPTION	MC	YLD	ECO. NO. IN	ECO. NO. OUT	S/N	WK IN	WK OUT
	021	01	24506816	8		2	PC	CAP FXD MYL .33UF 10P 100VDCW	P						
	022	01	36180753	0		2	PC	CAP FXD MYL .001MFD 600V	P						
	023	01	94240448	4		5	PC	CAP CER 100000PF 50V 10P	P						
	024	01	95691133	3		4	PC	CAP ELEC 270UF -10+100P 25VDC	P						
	025	01	94842168	0		4	PC	CAP FXD CER .0033UF 8MV 1000V	P			14722			8127
	025	02	51001214	9		4	PC	CAP FXD CER .005UF 20P 3000V	P		14722			8127	
	026	01	94397161	4		2	PC	CAP AL ELECT 560UF OHM 75V	P						
	027	01	94397162	2		2	PC	CAP AL ELECT 5600UF OHM 12V	P						
	028	01	51001120	8		3	PC	CAP CER F-2 .01UF +80-20P 25V	P			14856			8148
	028	02	19115400	4		3	PC	CAP FXD CER .01MF +80-20P 50V	P		14856			8148	
	029	01	94842145	8		2	PC	CAP FXD CER 500PF 20P 1K	P						
	031	01	94400612	1		5	PC	CAP FXD AL 15UF +100-10P 20V	P			14774			8133
	031	02	94400612	1		4	PC	CAP FXD AL 15UF +100-10P 20V	P		14774			8133	
	033	01	94360236	7		1	PC	RES FXD FM 237 OHM 1P 1/4W	P						
	034	01	24507181	6		2	PC	RES FXD COMP 5600 OHM 5P 1W	P						
	035	01	95596503	3		2	PC	RES FXD WW 4.3 OHM 10P 5WATT	P						
	036	01	95596520	7		2	PC	RES FXD WW 600 OHM 10P 5WATT	P						
	037	01	65019518	3		6	PC	RES CARB COMP 1/2W 1.3 OHMS	P						
	038	01	95596511	6		1	PC	RES FXD WW 43 OHM 10P 5WATT	P						
	039	01	94402159	1		7	PC	RES FM 1.3K OHM 1/4 W CARBON	P						
	040	01	94402172	4		2	PC	RES FM 4.7K OHM 1/4W CARBON	P						
	041	01	94402148	4		2	PC	RES FM 470 OHM 1/4W CARBON	P						

BUILD ARC 210

ASSEMBLY PARTS LIST

PRINT DATE	PAGE	FILE CHANGE NO.
01-13-82	3	00014985

DIV	ASSEMBLY NUMBER	CD	REV	DWG.	DESCRIPTION	RK	STATUS	STATUS DATE	ENG. RESP.	FILE DATE
086U	90446290	0	H	0	REPLACED BY 90446443 14985	A	INA	01-08-82	FA501A	01-13-82

TYPING NO	LI	PART NUMBER	CD	M	QUANTITY		U/M	PART DESCRIPTION	RK	YLD	ECO. NO. IN	ECO. NO. OUT	S/N	WK IN	WK OUT
042	01	94402166	6		1		PC	RES FM 2.7K OHM 1/4W CARBON	P						
043	01	94402220	1		7		PC	RES FM 470K OHM 1/4W CARBON	P						
045	01	94402160	9		1		PC	RES FM 1.5K OHM 1/4W CARBON	P						
046	01	94402110	4		2		PC	RES FM 12 OHM 1/4W CARBON	P						
047	01	94360331	6		1		PC	RES FXO FM 2100 OHM 1P 1/4W	P						
048	01	24504839	2		2		PC	RES FXO COMP 100 OHM 5P 2WATT	P						
049	01	94402176	5		1		PC	RES FM 6.8K OHM 1/4W CARBON	P						
050	01	94402167	4		4		PC	RES FM 3K OHM 1/4W CARBON	P						
051	01	51918846	0		2		PC	RES VAR CER 1K OHM 20P 1/2W	P						
052	01	94402155	9		1		PC	RES FM 910OHM 1/4W CARBON	P						
053	01	94402165	8		1		PC	RES FM 2.4K OHM 1/4W CARBON	P						
054	01	24500148	2		1		PC	RES FXD COMP 240 OHM 5P 1/2W	P						
056	01	94402180	7		1		PC	RES FM 10K OHM 1/4W CARBON	P						
057	01	51918101	0		2		PC	HT/SK PLSTC SEMI FI01 ANOZ	P						
058	01	94402179	9		1		PC	RES FM 9.1K OHM 1/4W CARBON	P						
060	01	51003962	1			001	OZ	PASTE, HEAT XFR CMPO NON-CONO	B						
061	01	10127103	9		4		PC	MSCR PAN PML 4-40X.312 STL ZP	B						
062	01	10126400	0		4		PC	WSHR, NO.4 EXT/T LK STL ZP	B						
063	01	10125103	1		4		PC	NUT, HEX 4-40 MSCR STL ZP	B						
064	01	15163443	3		1		PC	IC LM311N VOLT COMP HI IMP	P						
065	01	94402122	9		1		PC	RES FM 390MM 1/4W CARBON	P						

BUILD ARC 210

ASSEMBLY PARTS LIST

PRINT DATE	PAGE	FILE CHANGE NO.
01-13-82	4	00014985

DIV.	ASSEMBLY NUMBER	CD	REV.	DWG.	DESCRIPTION	RK	STATUS	STATUS DATE	ENG. RESP.	FILE DATE
086U	90446290	0	H	0	REPLACED BY 90446443 14985	A	INA	01-08-82	FA501A	01-13-82

TYPING NO	LI	PART NUMBER	CD	M	QUANTITY		U/M	PART DESCRIPTION	RK	YLD	ECO. NO. IN	ECO. NO. OUT	S/N	WK IN	WK OUT
066	01	94402132	8		2		PC	RES FM 100 OHM 1/4W CARBON	P						
067	01	94360100	5		1		PC	RES FXO FM 10 OHM 1P 1/4W	P						
068	01	50240105	2		1		PC	0100E SIL ZEN 4.7V	P						
069	01	16006500	9		REF		PC	FABRICATION SPECIFICATION	D						
070	01	94360262	3		1		PC	RES FXD FM 442 OHM 1P 1/4W	P						
071	01	51903001	9		1		PC	RES FXO WW .02 OHM 5P 2WATT	P						
072	01	95691135	8		2		PC	CAP ELEC 470UF -10+100P 25VDC	P						
073	01	17T20519	2		2		PC	RES FXO COMP 0.2HEG .5W 5P	P						
075	01	90446288	4		REF		PC	SCH 01A8 1AFO (PFOS PWR SUP)	O						
076	01	82311900	3		2		PC	INJECTOR-EJECTOR, NATURAL PCB	P						
077	01	93533118	1		2		PC	ROLLPIN, .1250 X .250L STL ZP	B						
078	01	24500131	8		2		PC	RES FXD COMP 47 OHM 5P 1/2W	P						
079	01	94402144	3		2		PC	RES FM 330 OHM 1/4W CARBON	P						
080	01	95691506	0		2		PC	RECT, 1N5416 F-R SIL 3 AMP	P						
081	01	51719400	2		2		PC	HEAT SINK ELCTRN COMP FAN TOP	P						
082	01	51797418	4		1		FT	TBG 1N5 .059 01A T/W	B						
083	01	62019900	0			050	OZ	EPOXY, 2-PART 5-MINUTE CLEAR	B						
084	01	12081500	6		2		PC	010 SIL SCHOTTKY PWR .55V/1A	P						
085	01	94240401	3		2		PC	CAP CER 1000PF 50V 10P	P						
086	01	51906601	3		2		PC	MT SINK, SEMI FI8 3 ALUM BLK	P						
087	01	95596512	4		1		PC	RES FXO WW 51 OHM 10P 5W	P						

BUILD ARC 210

ASSEMBLY PARTS LIST

PRINT DATE	PAGE	FILE CHANGE NO
01-13-82	9	00014985

DIV	ASSEMBLY NUMBER	CD	REV.	DWG	DESCRIPTION	MC	STATUS	STATUS DATE	DWG. RESP.	FILE DATE
0460	90446290	0	H	D	REPLACED BY 90446443 14985	A	INA	01-08-82	FA501A	01-13-82

T	FIND NO	LI	PART NUMBER	CD	M	QUANTITY	U/M	PART DESCRIPTION	MC	TLB	ECO. NO. IN	ECO. NO. OUT	S/N	WK IN	WK OUT
	086	01	94842184	7		2	PC	CAP FXD CER .02UF +80-20P 1K	P						
	089	01	94400619	6		1	PC	CAP ELEC 6-63VDC	P						
	090	01	94402177	3		2	PC	RES FM 7.5K OHM 1/4W CARBON	P						
	091	01	16042565	2		REF	PC	PLATO FLEX DISK SUBSYS	O		14754			8130	
	092	01	94400603	0		1	PC	CAP FXD ALUM 3.3UF 50V	P		14774			8133	
								0090 TOTAL LINES							

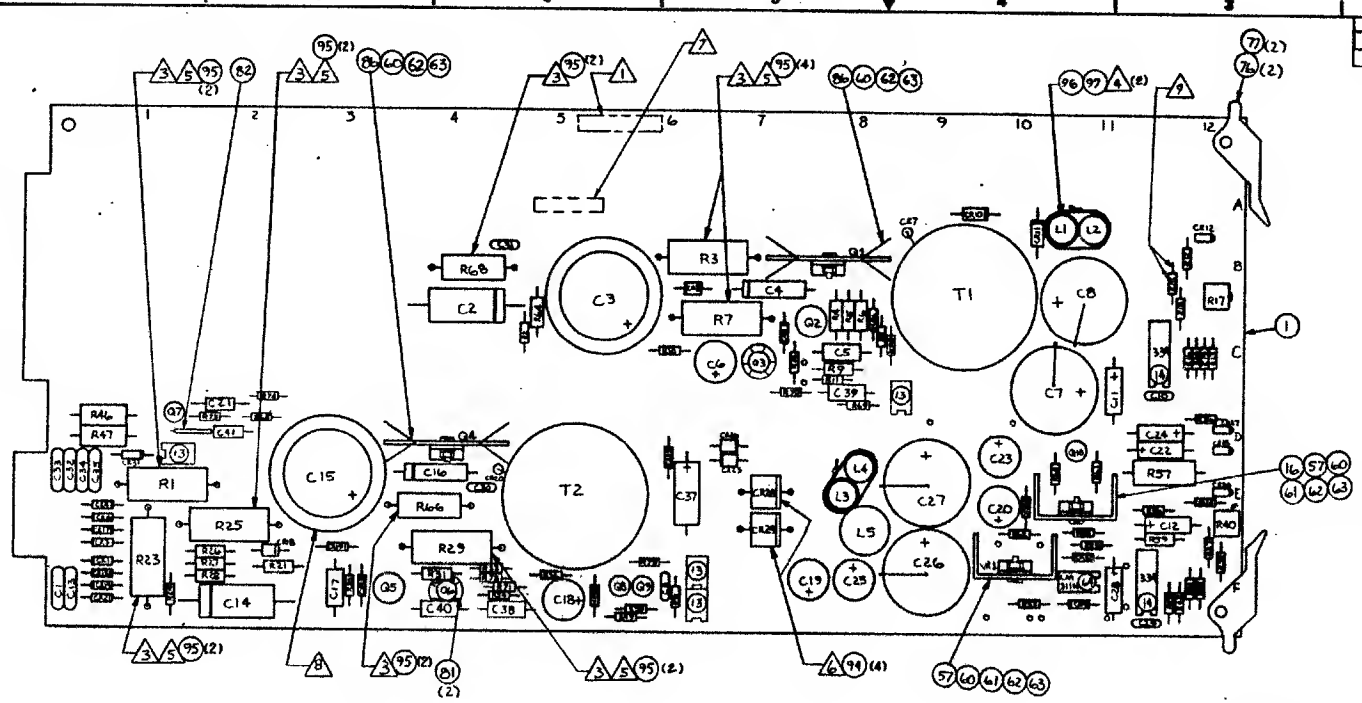

REV	ECO	DESCRIPTION	DRFT	DATE	CHKD	APD
A	13920-76	RELEASED CLASS K		1-8-72		
B	15945	ADDED F/N 94 & 97	DC	4/11/73	C.L.	5/18
C	16460	REVISE F/N 47		2-7-75		
D	16005	APL CHANGES	WJG	8-10-81	WJG	

90446443

CAPACITOR C15 MUST BE MOUNTED VERTICAL; (PERPENDICULAR TO BOARD PLANE).

RESISTOR R15 MUST BE MOUNTED APPROX. .25 INCH FROM BOARD SURFACE. SEE DETAIL. ONE RESISTOR LEG FACING NUMERICS ON BOARD TO BE RAISED.

NOTES:

1. MARK ASSY NO. AND REVISION LEVEL .12 HIGH, WHITE, IN AREA SHOWN PER CDC SPEC 10121508.

2. FIND NUMBERS, ELEMENT IDENTIFIERS, AND REFERENCE DESIGNATIONS ARE FOR REFERENCE ONLY AND DO NOT APPEAR ON PART.

3. MOUNT RESISTORS .250 MIN .350 MAX OFF BD.

4. F/N 96 TO BE INSTALLED ON ONE COMPLETE UNIT OF EACH PAIR L1, L2 AND L3, L4. PAIRS TO BE HELD TOGETHER BY F/N 97.

5. RESISTORS TO BE INSTALLED WITH PROTRUSION TOWARD THE BOARD.

6. MOUNT DIODES .300 MIN .500 MAX OFF P.C. BOARDS.

7. MARK SERIAL NUMBER IN AREA SHOWN PER RVLOPS PIP NO. 80:20:34 AND PER MARKING REQM'TS IN NOTE (1) ONE.

CHANGE TABLE	
DELETIONS	ADDITIONS

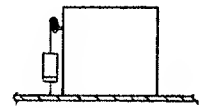

DETAIL OF CR7 & CR20 ASSY

DETAIL OF R15 ASSY

CROSS REFERENCE TABLE					
FIND NO	REFERENCE DESIGNATION	28	C9, C10, C29	65	R50
2	T1	29	C30, C31	66	R49, R55
3	T2	31	C11, C22, C24	67	R56
4	Q1, Q4	33	R61	68	CR33
5	Q2, Q8	34	R46, R47	70	R58
6	Q3, Q6, Q7, Q8, Q10	35	R1, R23	71	R57
7	Q9	36	R3, R25	72	C19, C28
8	CR1 THRU CR6, CR8, CR9, CR14 THRU CR17, CR19, CR22, CR31, CR35	37	R4, R5, R6, R26, R27, R28	73	R21, R64
		38	R7	76	R9, R31
9	CR5, CR7, CR18, CR20, CR23, CR26	39	R8, R11, R14, R18, R30, R33, R54	79	R19, R44
10	CR28, CR29	40	R10, R32	80	CR10, CR11
11	CR12, CR25, CR27, CR30	41	R51, R53	84	CR8, CR21
12	CR24, CR32	42	R39	85	C21, C41
15	CR13	43	R2, R24, R70, R72, R73, R74, R75	87	R29
17	VR1	45	R60	88	C34, C35
18	L1, L2, L3, L4	46	R20, R45	89	C37
19	L5	47	R62	90	R69, R71
20	C3, C15	48	R66, R68	92	C12
21	C2, C14	49	R12	93	C28
22	C4, C16	50	R13, R16, R41, R42		
23	C5, C17, C38, C39, C40	51	R17, R40		
24	C6, C18, C20, C25	52	R38		
25	C1, C13, C32, C33	53	R36		
26	C7, C8	54	R59		
27	C26, C27	56	R63		
		58	R15		

APL 90446296

DETACHED LISTS

UNLESS OTHERWISE SPECIFIED DIMENSIONS ARE IN INCHES
TOLERANCES
3 PLACE ±.7 2 PLACE ±.7 ANGLES ±.7

DO NOT SCALE DRAWING

MATERIAL
FINISH

DRAWN BY	FA501-A81C/D	
CHECKED BY	RR810-A/B	
DESIGNED BY	W.J. Gagnon	4-5-81
PROJECT ENG.	D. Ayers	1-9-81
MANAGER	R. Bennett	1-9-81
DATE		1-7-81
APPROVED		1-7-81
MECH		

TITLE P.C. CARD ASSEMBLY, 1AFD

CODE IDENT 15920 | D | 90446443

SCALE NONE | SIZE 15632209 | SHEET 1 OF 1

BUILD ARC 220

ASSEMBLY PARTS LIST

PRINT DATE	PAGE	FILE CHANGE NO
08-09-83	1	0016005A

DIV	ASSEMBLY NUMBER	CD	REV	DWG.	DESCRIPTION	MC	STATUS	STATUS DATE	ENG. RESP.	FILE DATE
0860	90446443	5	D	D	PC CD ASSY 1AFD	A	REL	01-08-82	FA501A/D	08-09-83

T	FIND NO	LI	PART NUMBER	CD	M	QUANTITY		U/M	PART DESCRIPTION	MC	YLD	ECO. NO. IN	ECO. NO. OUT	S/N	WK IN	WK OUT
	001	01	90446332	0		1		PC	PW BD 1AFD PWR SPLY	P						
	002	01	51940599	7		1		PC	TRANSFORMER FLYBACK 25KHZ	P						
	003	01	51940598	9		1		PC	TRANSFORMER FLYBACK 25KHZ	P						
	004	01	51918111	9		2		PC	XSTR NPM 400V 8A TO 220	P						
	005	01	51681100	7		2		PC	XSTR 2N5189 NPN SIL	P						
	006	01	51003092	7		5		PC	XSTR 2N2222 HI-SPEED NPN SIL	P						
	007	01	51714000	0		1		PC	XSTR, 2N2907 SI-POLAR PNP SI	P						
	008	01	95637304	7		14		PC	RECT, SIL 1N4004 1A 400V MIN	P						
	009	01	95691500	3		6		PC	RECT, SIL IN5615 1A 200V F-R	P						
	010	01	77835261	7		2		PC	DIO MR821 PWR REC7 100WIV SID	P						
	011	01	19171201	7		4		PC	LIGHT IND	P						
	012	01	50240108	6		2		PC	DIO 1N753A ZEN 6.2V 5P 20MA	P						
	013	01	95791300	7		4		PC	OPTICAL ISOLATOR	P						
	014	01	51718400	8		2		PC	IC 723C 334 VOLTAGE REGULATOR	P						
	015	01	51007385	1		1		PC	DIO 1N4148 SIL MICRO 30V 10MA	P						
	016	01	15163403	7		1		PC	IC LM317 317 ADJ POS V RGLTR	P						
	017	01	15151400	7		1		PC	IC UA7905 3S6A NEG V RGLTR	P						
	018	01	51918616	7		4		PC	IMO, RF-CHOKE 100UH 1.5A F-1	P						
	019	01	51918617	5		1		PC	IMO, RF-CHOKE 70UH 7A F-1	P						
	020	01	51918627	4		2		PC	CAP ALUM ELEC7 300UF 250V 15P	P						
	021	01	24506816	8		2		PC	CAP FXD MYL .33UF 10P 100VDCW	P						

BUILD ARC 220

ASSEMBLY PARTS LIST

PRINT DATE	PAGE	FILE CHANGE NO.
08-09-83	2	0016005A

DIV	ASSEMBLY NUMBER	CD	REV	DWG.	DESCRIPTION	MC	STATUS	STATUS DATE	ENG. RESP.	FILE DATE
0860	90446443	5	D	D	PC CD ASSY 1AFD	A	REL	01-08-82	FA501A/D	08-09-83

T	FIND NO	LI	PART NUMBER	CD	M	QUANTITY		U/M	PART DESCRIPTION	MC	YLD	ECO. NO. IN	ECO. NO. OUT	S/N	WK IN	WK OUT
	022	01	36180753	0		2		PC	CAP MYL FM .001UF 10P 600VDCW	P						
	023	01	94240448	4		5		PC	CAP FXD CER 100KPF 10P 50VDCW	P						
	024	01	95691133	3		4		PC	CAP ELEC7 270UF -10+100P 25V	P						
	025	01	51001214	9		4		PC	CAP FXD CER .005UF 20P 3000V	P						
	026	01	94397161	4		2		PC	CAP AL ELEC 560UF-10+100P 75V	P						
	027	01	94397162	2		2		PC	CAP AL ELEC 5600UF-10+100 12V	P						
	028	01	19115400	4		3		PC	CAP FXD CER .01UF +80-20P 50V	P						
	029	01	94842145	8		2		PC	CAP FXD CER 500PF 20P 1K	P						
	031	01	94400612	1		3		PC	CAP AL ELEC 15UF-10+100P 25V	P						
	033	01	94360236	7		1		PC	RES FXD FM 237 OHM 1P 1/4W	P						
	034	01	24507181	6		2		PC	RES FXD COMP 5600 OHM 5P 1W	P						
	035	01	95596503	3		2		PC	RES FXD WW 4.3 OHM 10P 5WATT	P						
	036	01	95596520	7		2		PC	RES FXD WW 600 OHM 10P 5WATT	P						
	037	01	65019510	3		6		PC	RES CARB COMP 1/2W 1.3 OHMS	P						
	038	01	95596511	6		1		PC	RES FXD WW 43 OHM 10P 5WATT	P						
	039	01	94402159	1		7		PC	RES FXD C FM 1.3K OHM 5P 1/4W	P						
	040	01	94402172	4		2		PC	RES FXD C FM 4.7K OHM 5P 1/4W	P						
	041	01	94402140	4		2		PC	RES FXD C FM 470 OHM 5P 1/4W	P						
	042	01	94402166	6		1		PC	RES FXD C FM 2.7K OHM 5P 1/4W	P						
	043	01	94402228	1		7		PC	RES FXD C FM 470K OHM 5P 1/4W	P						
	045	01	94402160	9		1		PC	RES FXD C FM 1.5K OHM 5P 1/4W	P						

BUILD ARC 220

ASSEMBLY PARTS LIST

PRINT DATE	PAGE	FILE CHANGE NO.
08-09-83	3	0016005A

DIV.	ASSEMBLY NUMBER	CD	REV.	DWG.	DESCRIPTION	INC	STATUS	STATUS DATE	DWG. RESP.	FILE DATE
0860	90446443	5	D	D	PC CD ASSY 1AFD	A	REL	01-08-82	FA501A/D	08-09-83

T	FIND NO	LI	PART NUMBER	CD	IN	QUANTITY		U/M	PART DESCRIPTION	INC	YLD	ECO. NO. IN	ECO. NO. OUT	S/N	WK IN	WK OUT
	046	01	94402110	4		2		PC	RES FXD C FM 12 OHM 5P 1/4W	P						
	047	01	94360331	6		1		PC	RES FXD FM 2108 OHM 1P 1/4W	P			16060			8330
	047	02	94360330	8		1		PC	RES FXD FM 2050 OHM 1P 1/4W	P		16060			0330	
	048	01	24504039	2		2		PC	RES FXD COMP 180 OHM 5P 2WATT	P						
	049	01	94402170	5		1		PC	RES FXD C FM 0.8K OHM 5P 1/4W	P						
	050	01	94402107	4		4		PC	RES FXD C FM 3.0K OHM 5P 1/4W	P						
	051	01	51918840	0		2		PC	RES VAR CRM 1K R 20P 1/2W 1	P						
	052	01	94402155	9		1		PC	RES FXD C FM 910 OHM 5P 1/4W	P						
	053	01	94402165	0		1		PC	RES FXD C FM 2.4K OHM 5P 1/4W	P						
	054	01	24500148	2		1		PC	RES FXD COMP 240 OHM 5P 1/2W	P						
	056	01	94402100	7		1		PC	RES FXD C FM 10K OHM 5P 1/4W	P						
	057	01	51910181	0		2		PC	HT/SK, SEMICNDCT F16-18 AL/BL	P						
	058	01	94402179	9		1		PC	RES FXD C FM 9.1K OHM 5P 1/4W	P						
	060	01	51003962	1			001	OZ	PASTE, HEAT XFR CMPD NON-COND	B						
	061	01	10127103	9		4		PC	MSCR PAN PHL 4-40X.312 STL ZP	B			16005			8350
	061	02	10127103	9		2		PC	MSCR PAN PHL 4-40X.312 STL ZP	B		16005			0350	
	062	01	10126400	0		4		PC	WSHR, (4) EXT/T LK STL ZP	B						
	063	01	10125103	1		4		PC	NUT, HEX 4-40 MSCR STL ZP	B						
	064	01	15163443	3		1		PC	IC LM311N 311 VOLT COMPARATOR	P						
	065	01	94402122	9		1		PC	RES FXD C FM 39 OHM 5P 1/4W	P						
	066	01	94402132	8		2		PC	RES FXD C FM 100 OHM 5P 1/4W	P						
	067	01	94360180	5		1		PC	RES FXD FM 10 OHM 1P 1/4W	P						

BUILD ARC 220

ASSEMBLY PARTS LIST

PRINT DATE	PAGE	FILE CHANGE NO.
08-09-83	4	0016005A

DIV.	ASSEMBLY NUMBER	CD	REV.	DWG.	DESCRIPTION	INC	STATUS	STATUS DATE	DWG. RESP.	FILE DATE
0860	90446443	5	D	D	PC CD ASSY 1AFD	A	REL	01-08-82	FA501A/D	08-09-83

T	FIND NO	LI	PART NUMBER	CD	IN	QUANTITY		U/M	PART DESCRIPTION	INC	YLD	ECO. NO. IN	ECO. NO. OUT	S/N	WK IN	WK OUT
	068	01	50240105	2		1		PC	DIO 1N750A ZEN 4.7V 5P 20MA	P						
	069	01	16006500	9		REF		PC	FABRICATION SPECIFICATION	D						
	070	01	94360262	3		1		PC	RES FXD FM 442 OHM 1P 1/4W	P						
	071	01	51903001	9		1		PC	RES FXD WW .02 OHM 5P 2WATT	P						
	072	01	95691135	8		2		PC	CAP ELECT 470UF -10+100P 25V	P						
	073	01	17720519	2		2		PC	RES FXD COMP 0.2MEG .5W 5P	P						
	075	01	90446280	4		REF		PC	SCH 01A6 1AFD (PFOS PWR SUP)	D						
	076	01	82311908	3		2		PC	INJECTOR-EJECTOR, NATURAL PCB	P						
	077	01	93533118	1		2		PC	ROLLPIN, .1250 X .250L STL ZP	B						
	078	01	24500131	8		2		PC	RES FXD COMP 47 OHM 5P 1/2W	P						
	079	01	94402144	3		2		PC	RES FXD C FM 330 OHM 5P 1/4W	P						
	080	01	95691500	0		2		PC	RECT, SIL 1N5616 3A 100V F-R	P						
	081	01	51719600	2		2		PC	HEAT SINK ELCTRN CDMP FAM TOP	P						
	002	01	51797410	4			062	FT	TBG 1M5 .059 DIA T/W	B						
	003	01	62019900	0			050	OZ	EPOXY, 2-PART 5-MINUTE CLEAR	B			16005			8350
	004	01	12081500	6		2		PC	DIO SIL SCHOTTKY PWR .55V/1A	P						
	005	01	94240401	3		2		PC	CAP FXD CER 1000PF 10P 50VDCW	P						
	080	01	51906601	3		2		PC	HT/SK, SEMICNDCT F10-1 AL/BLK	P			16005			8350
	086	02	51906604	7		2		PC	HT/SK, SEMICNDCT F16-1 AL/BLK	P		16005			0350	
	087	01	95596512	4		1		PC	RES FXD WW 51 OHM 10P 5WATT	P						
	088	01	94842104	7		2		PC	CAP FXD CER .02UF 400-20P 1K	P						

BUILD ARC 220

ASSEMBLY PARTS LIST

PRINT DATE	PAGE	FILE CHANGE NO
00-00-03	5	00160005A

DIV	ASSEMBLY NUMBER	CD	REV.	DWG.	DESCRIPTION	ARC	STATUS	STATUS DATE	ENG. DESP.	FILE DATE
0060	90464443	5	0	0	PC CO ASSY 1AFD	A	REL	01-00-02	FA501A/D	00-00-03

T	FIND NO	LI	PART NUMBER	CD	QUANTITY		U/M	PART DESCRIPTION	ARC	YLD	ECO. NO. IN	ECO. NO. OUT	S/N	WK IN	WK OUT
	089	01	94400619	6	1		PC	CAP AL ELEC 33UF-10+100P 25V	P						
	090	01	94402177	3	2		PC	RES FXD C FM 7.5K OHM 5P 1/4W	P						
	091	01	16042065	2	REF		PC	PLATO FLEX DISK SUBSYS	D						
	092	01	94480603	0	1		PC	CAP AL ELEC 3.3UF-10+100P 50V	P						
	093	01	94400608	6	1		PC	CAP AL ELEC 1.0UF-10+100P 63V	P						
	094	01	94864044	9	4		PC	SPACER,NYLON .400	B		15945			0325	
	095	01	94864045	6	16		PC	SPACER, NYLON .500	B		15945			0325	
	096	01	24528638	0		166	FT	TBG, SZ 3/8 INSUL BLK UL PVC	B		10005A			0350	
	097	01	94277400	1	2		PC	STRAP, CBL TIE TYP-1 TO 5/8	B		16005A			0350	
								0094 TOTAL LINES							

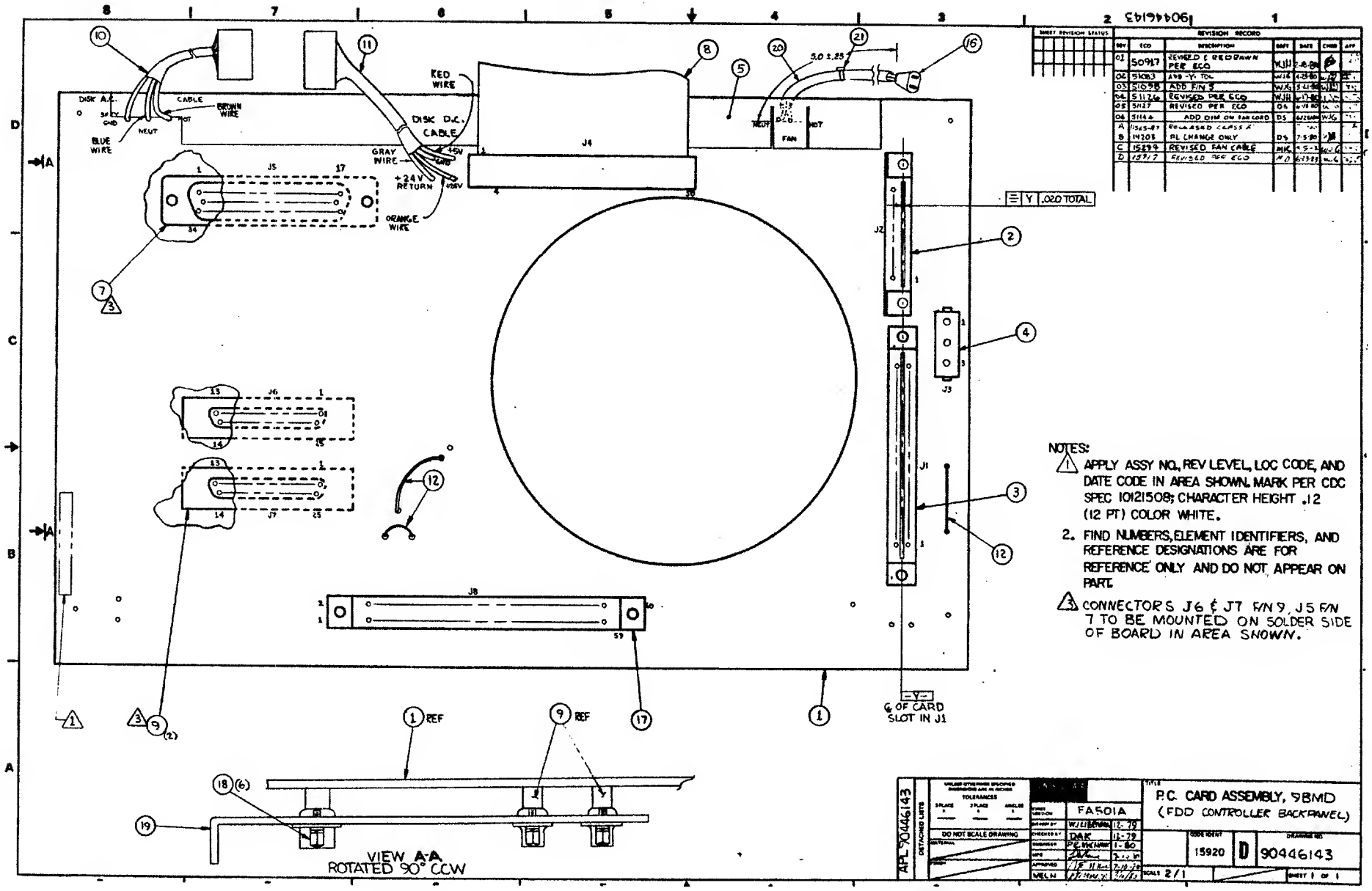
DISK A.C. CABLE
BROWN WIRE
BLUE WIRE
NEUT
HOT
GND
RED WIRE
DISK D.C. CABLE
GRAY WIRE
+24V RETURN
ORANGE WIRE
+5V
GND
+12V
J4
J5
J6
J7
J8
J1
J2
J3
FAN
5.0 ±.25
.020 TOTAL
℄ OF CARD SLOT IN J1
VIEW A-A
ROTATED 90° CCW
1 REF
9 REF
NOTES:
1. APPLY ASSY NO., REV LEVEL, LOC CODE, AND DATE CODE IN AREA SHOWN. MARK PER CDC SPEC 10121508; CHARACTER HEIGHT .12 (12 PT) COLOR WHITE.
2. FIND NUMBERS, ELEMENT IDENTIFIERS, AND REFERENCE DESIGNATIONS ARE FOR REFERENCE ONLY AND DO NOT APPEAR ON PART.
3. CONNECTORS J6 & J7 F/N 9, J5 F/N 7 TO BE MOUNTED ON SOLDER SIDE OF BOARD IN AREA SHOWN.
REVISION RECORD
P.C. CARD ASSEMBLY, 9BMD
(FDD CONTROLLER BACKPANEL)
FA501A
15920
D
90446143
SCALE 2/1
SHEET 1 OF 1
DO NOT SCALE DRAWING
APL 90446143

BUILD ARC 230

ASSEMBLY PARTS LIST

PRINT DATE	PAGE	FILE CHANGE NO.
06-14-83	1	00015917

DIV	ASSEMBLY NUMBER	CD	REV	DWG	DESCRIPTION	MC	STATUS	STATUS DATE	ENG. RESP.	FILE DATE
0860	90446143	1	D	0	CO ASSY 9BMO BACKPLANE	A	REL	07-16-80	FA501A	06-14-83

T	FIND NO	LI	PART NUMBER	CD	MC	QUANTITY		U/M	PART DESCRIPTION	MC	TLB	ECO. NO. IN	ECO. NO. OUT	S/N	WK IN	WK OUT
	001	01	90446142	3		1		PC	PW 8D 9BMO BACKPLANE	P						
	002	01	51940558	3		1		PC	CONN, PC BRD EDGE 8P1N UL	P						
	003	01	51940578	1		1		PC	CONN, PC BRD EDGE 30P1N	P						
	004	01	51906101	4		1		PC	CONN, PC-MTD 3 P1N NYL/SN F-1	P						
	005	01	71493161	5		1		PC	CHANNEL, EXTRUDED PLAST1C	P						
	006	01	83465803	1		1		PC	CONN,PLUG FEMALE	P			14203			8047
	007	02	10129640	8		1		PC	CONN RCPT, 50 SKT HSG PC-MT8	P		14203			8047	
	008	01	61408892	0		1		PC	CABLE SIGNAL PLATD FO	S						
	009	01	83434704	9		2		PC	CONN 25 P1N	P			14203			8047
	009	02	10129648	1		2		PC	CONN PLUG, 25 P1N HSG PC-MTG	P		14203			8047	
	010	01	61408891	2		1		PC	CABLE AC PLATD FO SUBSYSTEM	G						
	011	01	61408890	4		1		PC	CABLE DC PLATO FD SUBSYSTEM	G						
	012	01	24501808	0			250	FT	WIRE, BUSS 20AWG SDL1D CU/SN	W						
	016	02	65642201	1		1		PC	CORD, 24.51N FEM-RCPT 2-CNDCT	P			15294			8312
	016	03	61406511	5		1		PC	CABLE ASSY AC MUFF1N FAN	A		15294	15917		8312	8337
	016	04	65642201	1		1		PC	CORD, 24.51N FEM-RCPT 2-CNOCT	P		15917			8337	
	017	01	51863202	1		1		PC	CONN, 60PDS 8D-EOGE FIG-1 AU	P						
	018	01	94288024	6		6		PC	LKG DEVICE, CDNN TYP 4 W/TYP3	P			14453			8051
	018	02	18252501	4		6		PC	SCR-LDCK, CDNNECTDR CONF10-8	P		14453			8051	
	019	01	71493091	4		1		PC	PLATE, 1/O CDNNECTDR	P						
	020	01	24528645	5			375	FT	T8G, NO. 4 1NS CLR UL PVC	B		15917			8337	
	021	01	94277400	1		1		PC	STRAP, C8L TIE TYP-1 TO 5/8	B		15917			8337	

BUILD ARC 230

ASSEMBLY PARTS LIST

PRINT DATE	PAGE	FILE CHANGE NO.
06-14-83	2	00015917

DIV	ASSEMBLY NUMBER	CD	REV	DWG.	DESCRIPTION	MC	STATUS	STATUS DATE	ENG. RESP.	FILE DATE
0860	90446143	1	D	0	CO ASSY 9BMO BACKPLANE	A	REL	07-16-80	FA501A	06-14-83

T	FIND NO	LI	PART NUMBER	CD	MC	QUANTITY		U/M	PART DESCRIPTION	MC	TLB	ECO. NO. IN	ECO. NO. OUT	S/N	WK IN	WK OUT
									0022 TOTAL LINES							

No wire lists are contained in this manual. The following wire list document numbers are provided for reference purposes if needed.

Title	Document Number: Preproduction Units	Document Number: Production Units
60-Hz AC Entry Panel Wiring	61408888	61409023
50-Hz AC Entry Panel Wiring	61408889	61409024
DC Cable Wiring (Backpanel)	61408890	61408890
AC Cable Wiring (Backpanel)	61408891	61408891
Signal Cable Wiring (Backpanel)	61408892	61408892